REVISIONS					
REV.	ECN NO.	LOCATION	DESCRIPTION	DATE	DESIGN
A0	N/A		INITIAL RELEASE	/	/
A1	N/A		图面升级整理图面	2025.06.16	阿树

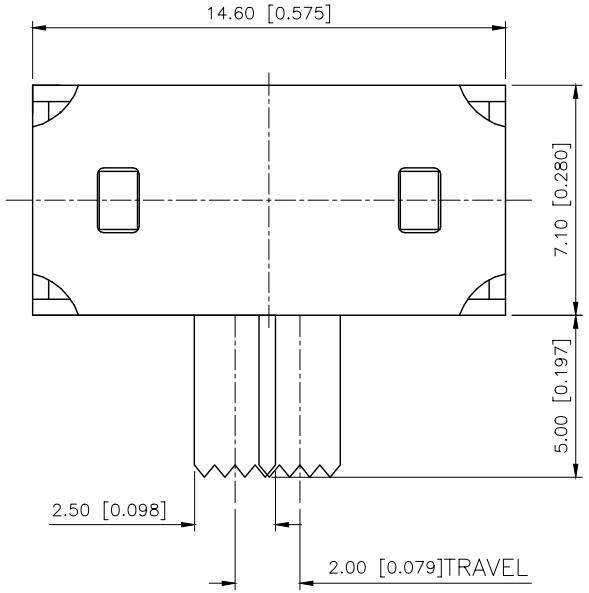

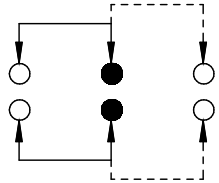

SCHEMATIC (NON-SHORTING)

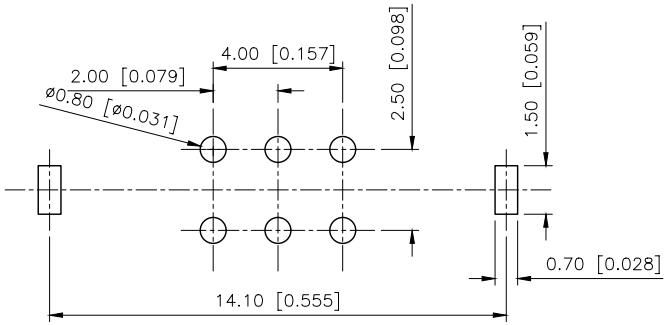

P.C.B LAYOUT
BOTTOM VIEW

SK22D15L5

L(mm)
2~9

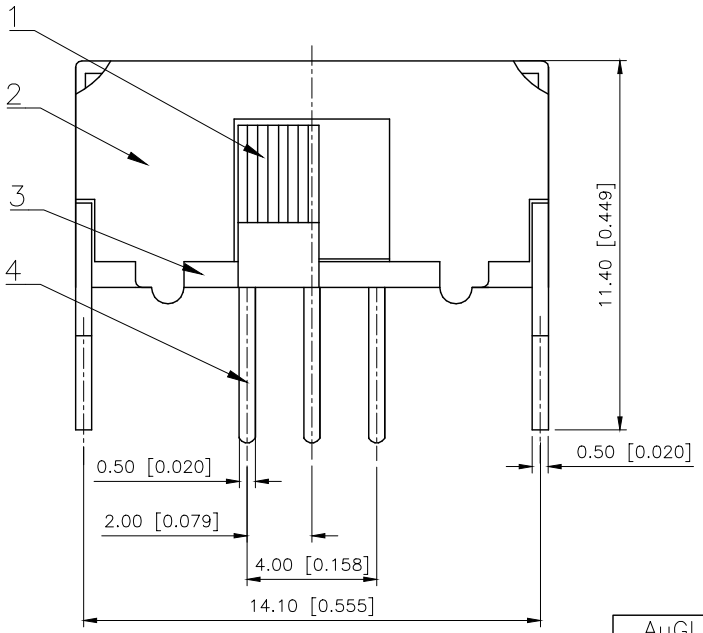

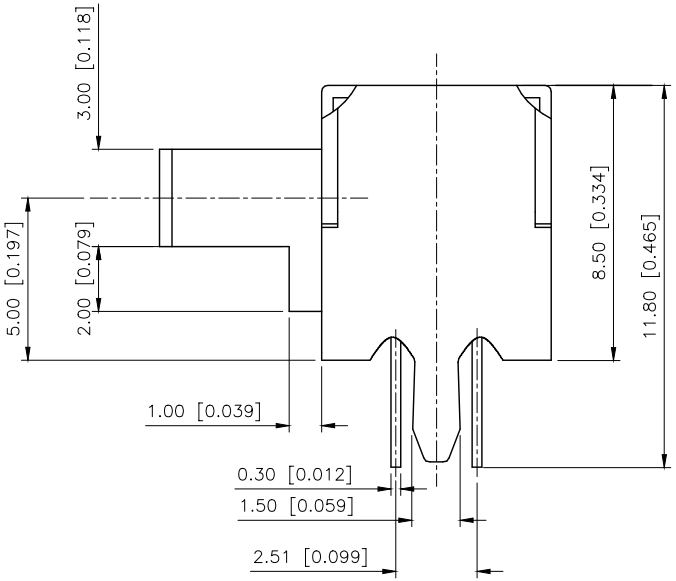

ITEM	PAPT NAME	QTY	MATERIAL	FINISHING
6	Spring	1	SUS STRIP	Natural
5	Contact Clip	2	PBS STRIP	AG CLAD
4	Terminal	6	Brass Strip	ag Plated
3	Base	1	Phenolic Resin	Natural
2	Frame	1	Steel Strip	NI Plated
1	Knob	1	PA66	Black

AuGLAR	±5°
X.	±0.40
X.x	±0.30
X.xx	±0.20
X.xxx	±0.15
UNSPECIFIED TOLERAuCES	

XKB Connection 星坤

DESIGN	阿树	VIEW:	MODEL TYPE: SLIDE SWITCH
CHECKED		UNIT: mm/in	PART NO.: SK22D15L5
APPROVED		SIZE: A4	DWG NO.: X-SK22D15L5

XKB INDUSTRIAL PRECISION CO.,LIMITED

SCALE	PAGE	REVISION
N/A	1/1	A1