REVISIONS					
REV.	ECN NO.	LOCATION	DESCRIPTION	DATE	DESIGN
A0	N/A		INITIAL RELEASE	/	/
A1	N/A		图面升级整理图面	2025.04.25	阿树

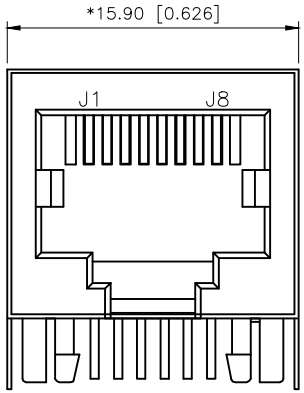

FRONT VIEW

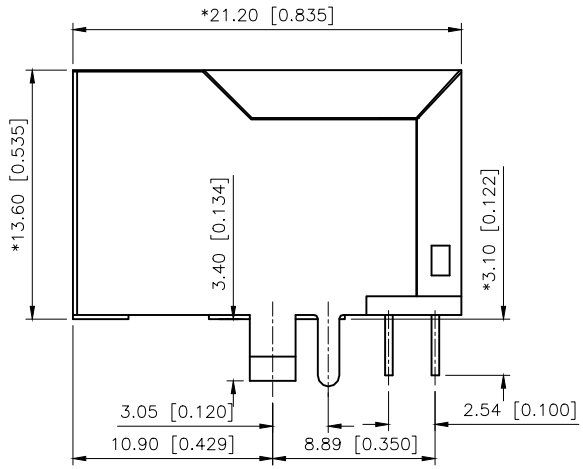

RIGHT SIDE VIEW

MATERIAL 材料:
- HOUSING 外壳: PA46,UL94V-0,BLACK.
- TERMINAL 端子: PHOSPHOR BRONZE ø=0.46MM, GOLD PLATING

SHIELD 保护物: C2680,T=0.20MM,20 MIN NICKEL PLATING ON ALL AREA.

MECHANICAL 机械:
- DURABILITY 耐用性: 750 CYCLES MIN,12.5MM/MINUTE.
- INSERTION FORCE 插入力:2.2KG.F MAX
- RETENTION STRENGTH 保持力:7.7KG.F BETWEEN JACK AND PLUG.
- OPERATING TEMPERATURE 工作温度: -40°C~+85°C.
- STORAGE TEMPERATURE 储存温度: -40°C~+85°C.
- ALL CRITICAL DIMENSIONS WITH "*"

ELECTRICAL电气:
- VOLTAGE 电压: 125 VOLTS AC.
- CURRENT RATING 电流额定值: 1.5AMP.
- DIELECTRIC STRENGTH 介电强度: 1000 VAC RMS 50HZ OR 60HZ,1 MIN
- INSULATION RESISTANCE 绝缘电阻: 500 MEGA OHMS MIN.INITIAL AFTER 500V DC FOR 1 MINUTE.
- CONTACT RESISTANCE 接触电阻:SINGLE TERMINAL 30 MILLIOHMS MAX. INITIAL 50 MILLIOHMS MAX. AFTER DURABILITY TEST.

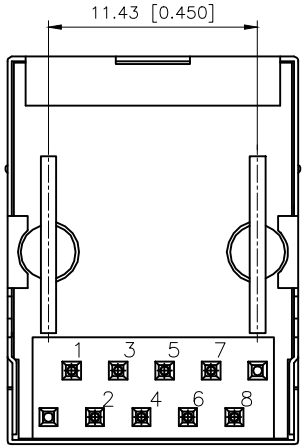

BOTTOM VIEW

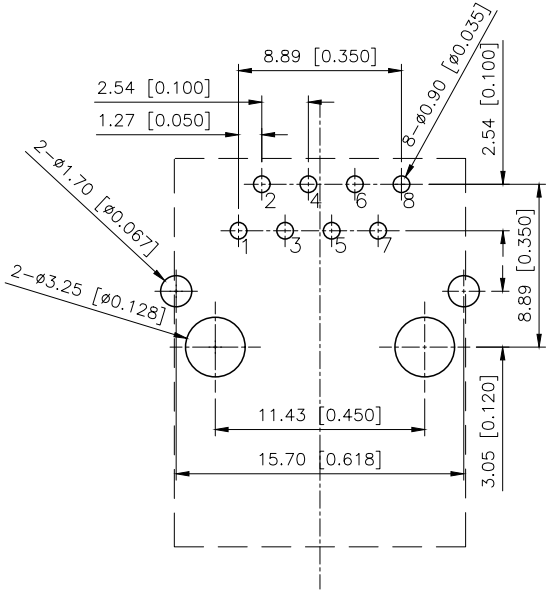

RECOMMENDED PCB LAYOUT
VIEWED FROM COMPONENT SIDE

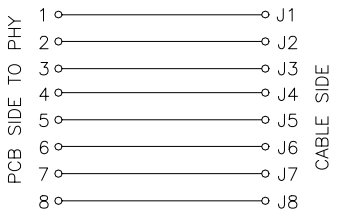

X18ABGWA3DY5027

- 1:Au=1U"
- 3:Au=3U"
- 4:Au=6U"
- 5:Au=15U"
- 6:Au=30U"

AuGLAR	±5°
X.	±0.40
X.x	±0.30
X.xx	±0.20
X.xxx	±0.15
UNSPECIFIED TOLERAuCES	

XKB Connection 星创

DESIGN	阿树	VIEW:	MODEL TYPE: RJ JACK
CHECKED		UNIT: mm/in	PART NO.: X18ABGWA3DY5027
APPROVED		SIZE: A4	DWG NO.: X-X18ABGWA3DY5027

XKB INDUSTRIAL PRECISION CO.,LIMITED

SCALE	PAGE	REVISION
N/A	1/1	A1