REVISIONS					
REV.	ECN NO.	LOCATION	DESCRIPTION	DATE	DESIGN
A1	N/A		图片面升级整理图面	2024.07.26	阿 树

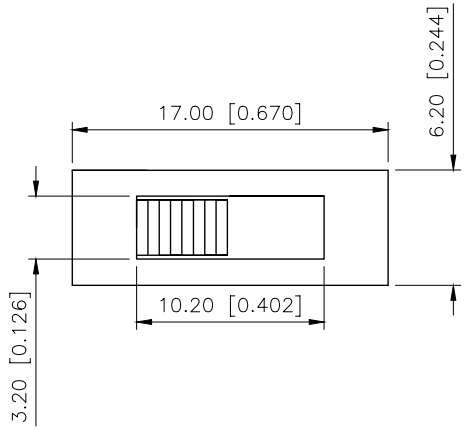

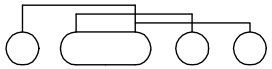

SS13E05-L5

L(MM)
2~10

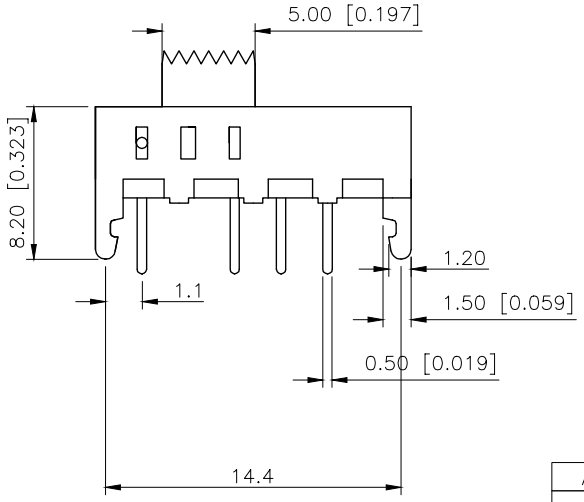

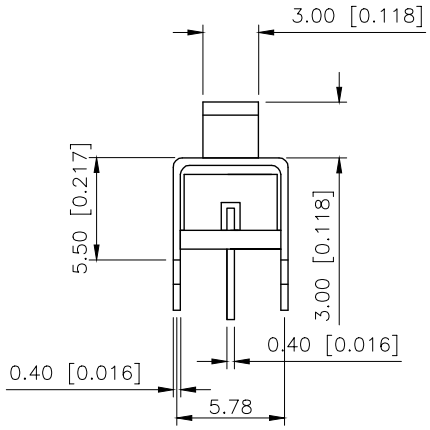

RATING	0.3A 50V DC
CIRCUIT	1P3T
CONTACT RESISITANCE	100MΩ MAX
TRAVEL	2.5MM
OPERATING FORCE	250±100gf
OPERATING LIFE	10000

ITEM	PAPT NAME	TER,NO	QTY	MATERIAL	FINISHING	
4	Terminal	——	4	SUS		
3	Base	——	1	SUS		
2	Cover	——	1	SUS		
1	Keystake	——	1	PA66		

ANGLAR	±5°
X.	±0.40
X.x	±0.30
X.xx	±0.20
X.xxx	±0.15
UNSPECIFIED TOLERANCES	

XKB

XKB INDUSTRIAL PRECISION CO.,LIMITED

DESIGN	阿 树	VIEW:	MODEL TYPE: SLIDE SWITCH
CHECKED		UNIT: mm/in	PART NO.: SS13E05-L5
APPROVED		SIZE: A4	DWG NO.: X-SS13E05-L5

SCALE	PAGE	REVISION
N/A	1/1	A1