REVISIONS					
REV.	ECN NO.	LOCATION	DESCRIPTION	DATE	DESIGN
A0	N/A		INITIAL RELEASE	/	/
A1	N/A	A1 X2	产品尺寸及外观变更	2025.04.18	阿树

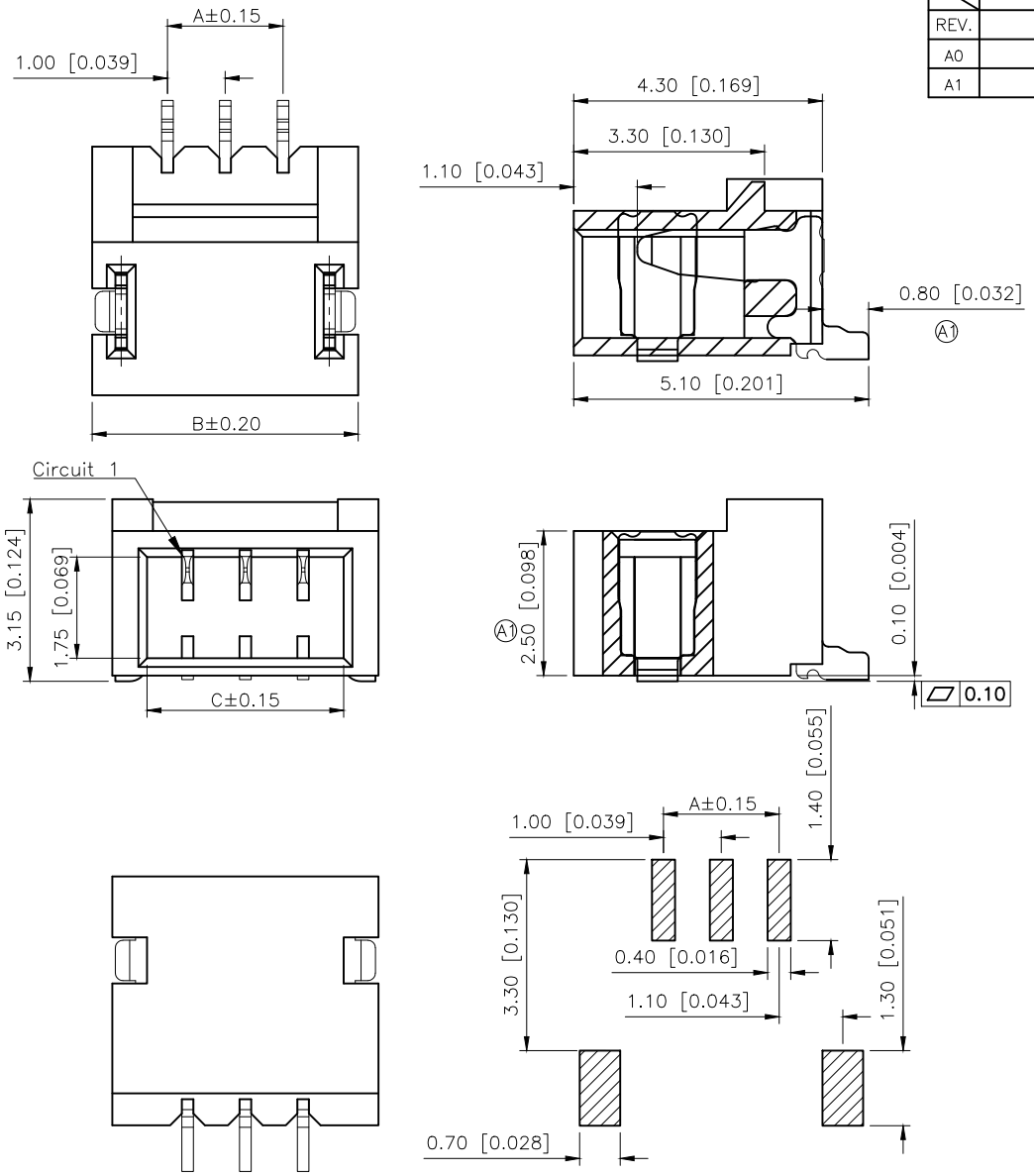

P.C.B. Layout

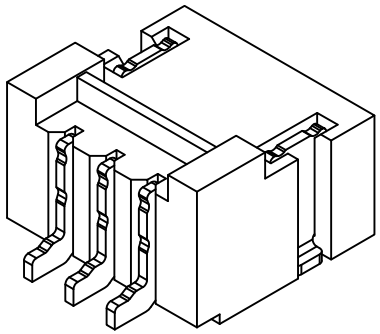

Specifications:
规格：
Voltage rating: 125V AC/DC
额定电压：125V AC/DC
Current rating: 1A AC / DC
额定电流：1A AC / DC
Withstanding voltage: 500V AC/minute
耐压电压：500V AC/minute
Temperature range:−40℃～+125℃
温度范围：−40℃～+125℃
Insulation resistance:≥100MΩ
绝缘电阻：≥100MΩ
Contact resistance：≤20mΩ
接触电阻:≤20mΩ
After environmental testing:≤40mΩ
环境测试后：≤40mΩ

PART NO.:

X1002 W R S−09 B1−9T SN
① ② ③ ④ ⑤ ⑥ ⑦ ⑧

①Series No
②Category:W−Wafer
③Welding Board Angle:R−Stright 90°
④Welding Way: S−SMT
⑤Row No.−Pin No.:XX−02P~20P
⑥Plug the Pin & Special N0.:
B1−Pad、On both sides of the middle position
⑦Material:9T−PA9T 94V−0
⑧Planting Category:SN−Bright tin plating 70" Min.

Poles	Dimensions(mm)		
	A	B	C
2	1.00	3.60	2.40
3	2.00	4.60	3.40
4	3.00	5.60	4.40
5	4.00	6.60	5.40
6	5.00	7.60	6.40
7	6.00	8.60	7.40
8	7.00	9.60	8.40
9	8.00	10.60	9.40
10	9.00	11.60	10.40
11	10.00	12.60	11.40
12	11.00	13.60	12.40
13	12.00	14.60	13.40
14	13.00	15.60	14.40
15	14.00	16.60	15.40

PART N0	Material	Suitable XKB Terminal
X1002WRS−09B1−9TSN	PA9T UL 94V−0	X1002T−B1

AuGLAR	±5°
X.	±0.40
X.x	±0.30
X.xx	±0.20
X.xxx	±0.15
UNSPECIFIED TOLERAuCES	

XKB Connection

DESIGN	阿树	VIEW:	MODEL TYPE: 1.00mm Crimp Style Connectors
CHECKED		UNIT: mm/in	PART NO.: X1002WRS−09B1−9TSN
APPROVED		SIZE: A4	DWG NO.: X−X1002WRS−09B1−9TSN

XKB INDUSTRIAL PRECISION CO.,LIMITED

SCALE	PAGE	REVISION
N/A	1/1	A1