REVISIONS					
REV.	ECN NO.	LOCATION	DESCRIPTION	DATE	DESIGN
A1	N/A		图面升级整理图面	2025.06.07	阿树
A2	ECN-P-2026041301	A2X2	产品行程及按键材质变更	2026.04.13	山楂

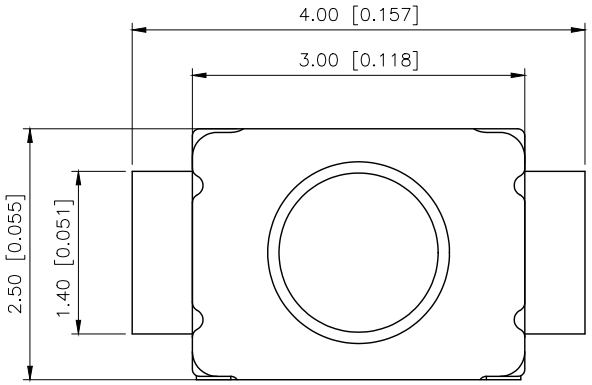

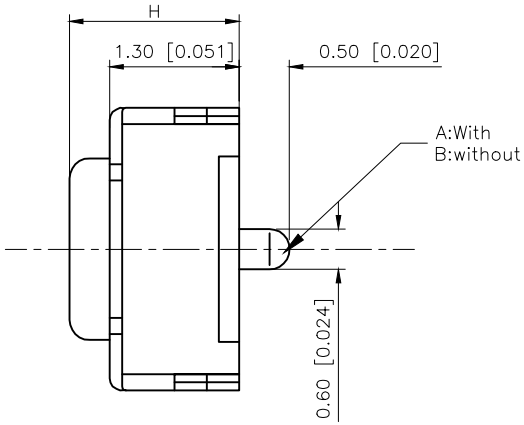

额定范围 Rated range	50mA DDC12V
耐电压 Rate voltage current	AC250V 50Hz/1min
绝缘电阻 Insulted resistance	≥100MΩ
接触电阻 Contact resistance	≤50mΩ
环境温度 ambient temperature	-25℃~+70℃
相对湿度 relative humidity	（40℃ ）≤60%
寿命 life	50,000 cycles Min
行程 Travel	0.1±0.05mm

A2

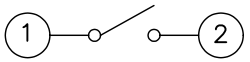

CIRCUIT DIAGRAM

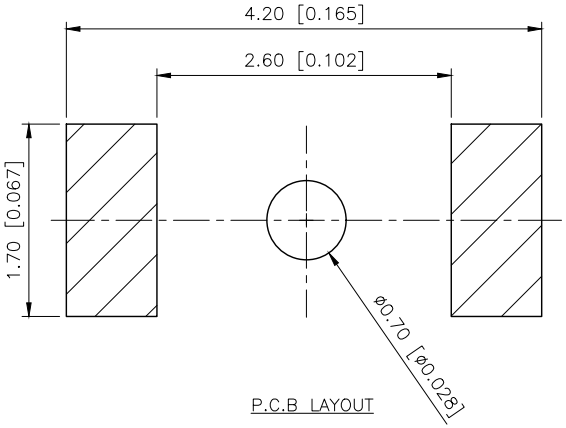

P.C.B LAYOUT

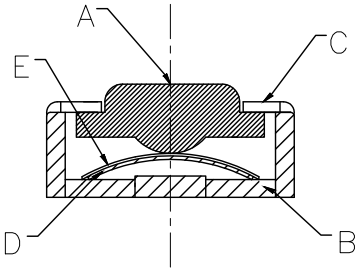

PAPT NO	TS-3025-B-A-B
Operating Force(±50gf)	A:160gf B:260gf C:350gf
Height	H:A:1.5 B:1.6 C:1.7
Fixed column	A:With B:without

ITEM	PAPT NAMF	QTY	MATERIAL	PLATED/COLOR
E	Film	1	polyimide	Yellow
D	Contact	2	F.ag/SUS	Ag Plated-silvery white
C	Cover	1	SUS	silvery white
B	Base	1	LCP	Ag Plated-Black
A	Button	1	LCP	Black

A2

AuGLAR	±5°
X.	±0.40
X.x	±0.30
X.xx	±0.20
X.xxx	±0.15
UNSPECIFIED TOLERAuCES	

XKB 星坤 Connection

DESIGN	山楂	VIEW:	MODEL TYPE: TACT SWITCH
CHECKED		UNIT: mm/in	PART NO.: TS-3025-B-A-B
APPROVED		SIZE: A4	DWG NO.:

XKB INDUSTRIAL PRECISION CO.,LIMITED

SCALE	PAGE	REVISION
N/A	1/1	A2

www.helloxkb.com www.helloxkb.cn www.xk-dg.cn