REVISIONS					
REV.	ECN NO.	LOCATION	DESCRIPTION	DATE	DESIGN
A0	N/A		INITIAL RELEASE	/	/
A1	N/A		图面升级整理图面	2025.12.22	阿树

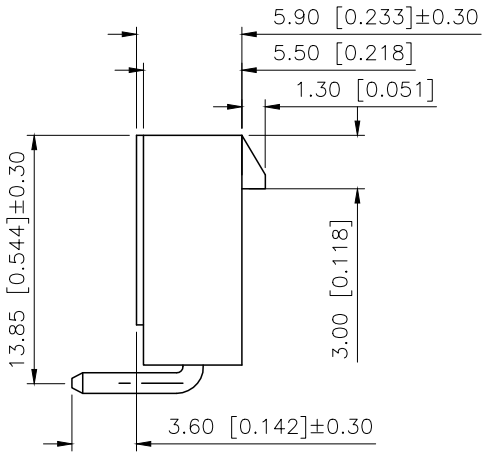

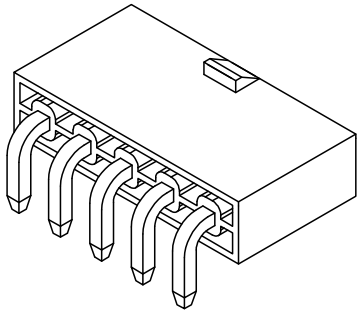

■SPECIFICATIONS
- •Voltage rating:600V AC/DC
- •Current rating:7A AC/DC
- •Withstanding Voltage:1500V AC/minute
- •Temperature range:−45°C+125°C
- •Insulation resistance:≥1000MΩ
- •Contact resistance:≤20mΩ

PART NO.:

X9357 W R−02−N0 SN
① ② ③ ④ ⑤ ⑥

① Series No
② Category:W−Wager
③ Welding Board Angle:R−Stright 90°
④ Row No.Pin No:XX−02~06 P
⑤ Material:N0−PA66 UL94V−0 ;
N2−PA66 UL94V−2
⑥ Plating:SN−Tin Plated

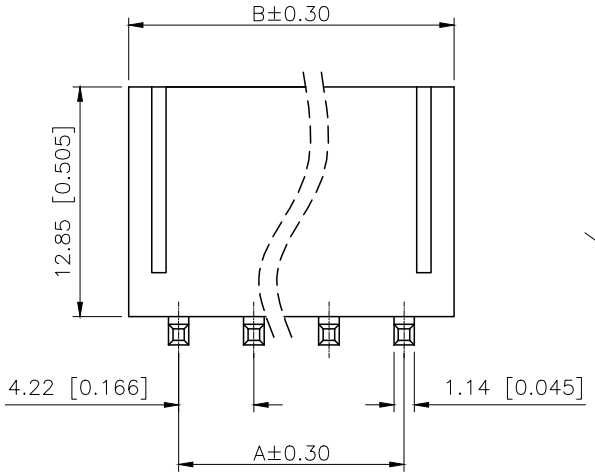

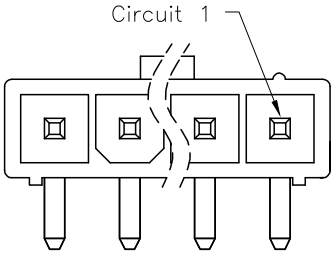

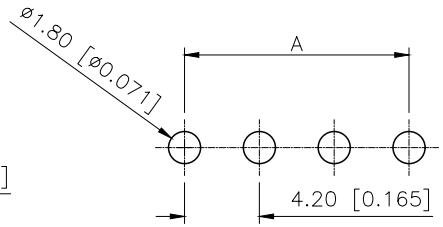

PCB Layout

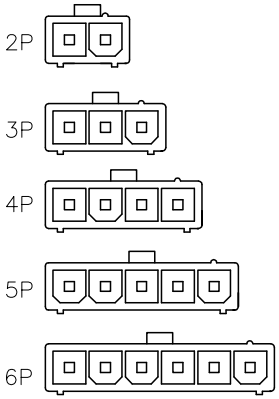

Poles	Dimensions(mm)	
	A	B
02	4.20	9.80
03	8.40	14.00
04	12.60	18.20
05	16.80	22.40
06	21.00	26.60

PART NO	Material	Material(Pin)	Suitable XKB Housing
X9357WR−02−N0SN	PA66	Brass	X9357HM

AuGLAR	±5°
X.	±0.40
X.x	±0.30
X.xx	±0.20
X.xxx	±0.15
UNSPECIFIED TOLERAuCES	

XKB Connection 星创

DESIGN	阿树	VIEW:	MODEL TYPE: 4.20 mm Crimp Style Connectors
CHECKED		UNIT: mm/in	PART NO.: X9357WR−02−N0SN
APPROVED		SIZE: A4	DWG NO.:

XKB INDUSTRIAL PRECISION CO.,LIMITED

SCALE	PAGE	REVISION
N/A	1/1	A1