REVISIONS					
REV.	ECN NO.	LOCATION	DESCRIPTION	DATE	DESIGN
A0	N/A		INITIAL RELEASE	/	/
A1	N/A		图面升级整理图面	2025.06.27	阿树

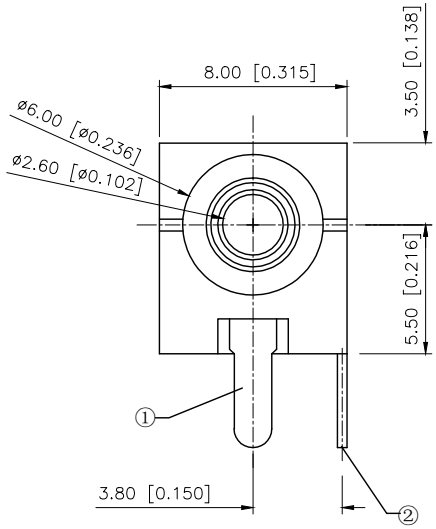

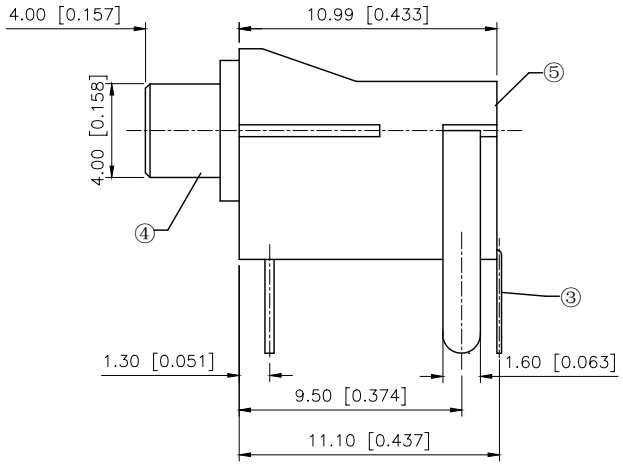

SPECIFICATION
产品规格
1.Rating: DC 30V 0.5A
额定值: DC 30V 0.5A
2.Contact resistance :<0.03;
接触电阻:<0.03 ;
3.Insulation resistance: >100MΩ(DC250V)
绝缘电阻: >100MΩ(DC250V)
4.Withstand voltage :500VAC;
耐受电压: 500VAC;
5.Insertion and extraction force:3-20N;
插拔力:3-20N;
6.life test:5,000 cycles.
寿命试验：5000次循环.

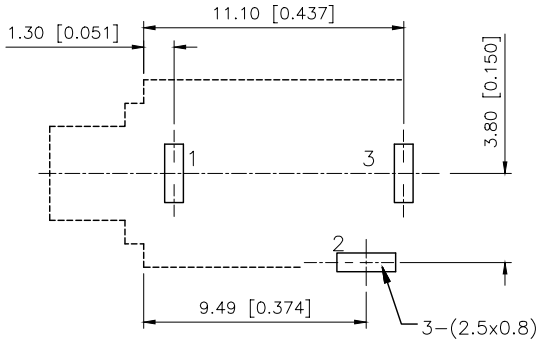

PCB Layout

Model No.	PJ-2020
Schematic	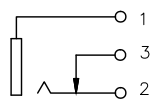

Plastic	PA10T	
Terminal 4	copper alloy	silver
Terminal 3	copper alloy	silver
Terminal 2	copper alloy	silver
Terminal 1	copper alloy	silver
PAPT NAMF	MATERIAL	PLATING

AuGLAR	±5°
X.	±0.40
X.x	±0.30
X.xx	±0.20
X.xxx	±0.15
UNSPECIFIED TOLERAuCES	

XKB Connection 星坤

DESIGN	阿树	VIEW:	MODEL TYPE: 3.5 PHONE JACK
CHECKED		UNIT: mm/in	PART NO.: PJ-2020
APPROVED		SIZE: A4	DWG NO.: X-PJ-2020

XKB INDUSTRIAL PRECISION CO.,LIMITED

SCALE	PAGE	REVISION
N/A	1/1	A1