REVISIONS					
REV.	ECN NO.	LOCATION	DESCRIPTION	DATE	DESIGN
A0	N/A		INITIAL RELEASE	/	/
A1	N/A		图面升级整理图面	2025.09.05	阿树

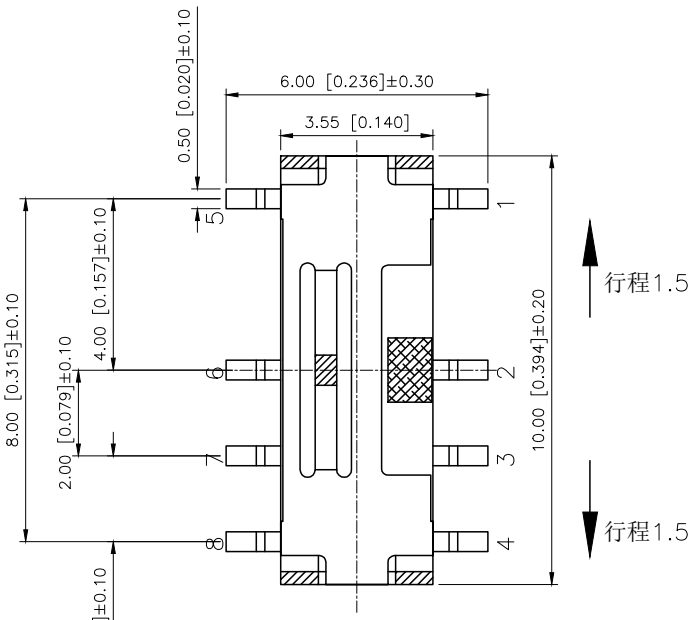

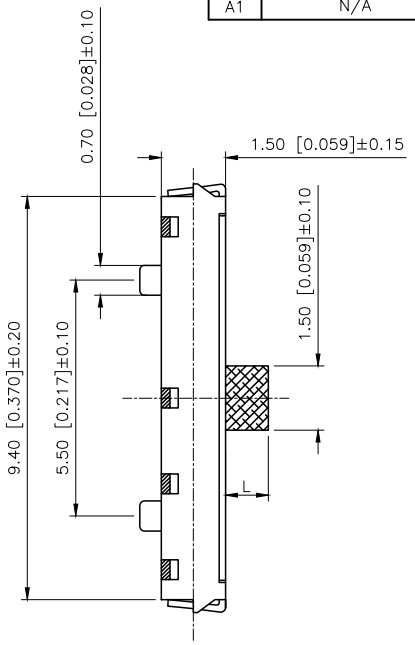

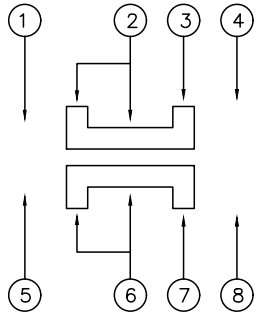

PAPT NO	L
SS-1400S-L1	1.5
SS-1400S-L2	2.0
SS-1400S-L3	2.5

Specifications(规格):
1.Voltage rating(额定电压):DC 12V
2.Current rating(额定电流):0.5A AC/DC
3.Withstanding voltage(耐压值):≥100V AC(50-60Hz)/minute
4.Insulation resistance(绝缘电阻):≥100MΩ Min
5.Mating cycles（使用寿命）：10,000 cycles Min
6.Operating Force（动作力）：250gf±100gf
7.Temperature range(使用温度):-10℃~+60℃

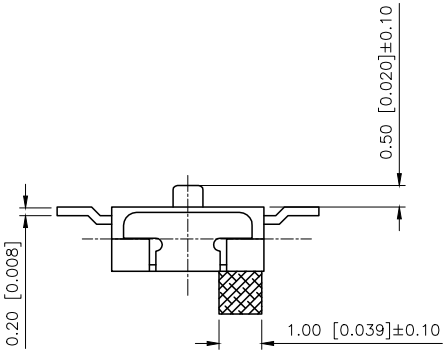

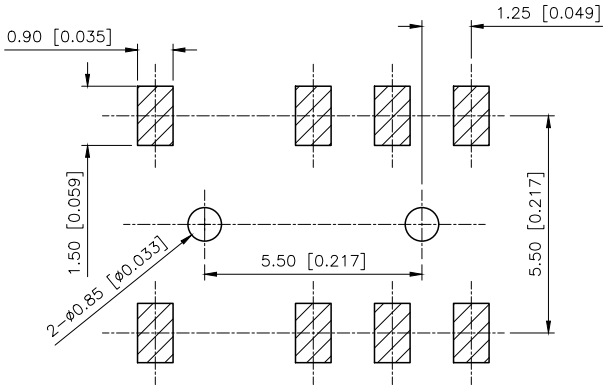

PCB LAYOUT PLAN

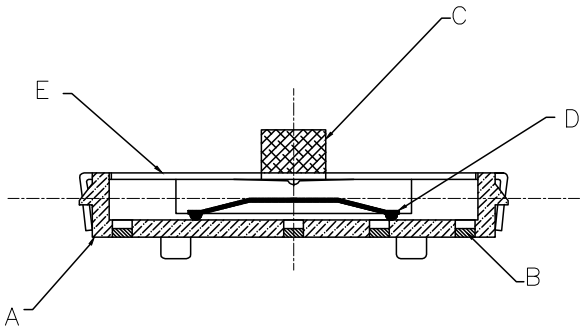

ITEM	PAPT NAME	MATERIAL	FLASH/COLOR	QTY
E	Cover	SUS	silvery white	1
D	Contact reeds	Phosphor bronze silver-plated	silvery white Silver-inlaid	2
C	Handle	PA46	Black	1
B	Cards	Brass	silvery white silver-plated	1
A	Housing	LCP	Gray-black	1

AuGLAR	±5°
X.	±0.40
X.x	±0.30
X.xx	±0.20
X.xxx	±0.15
UNSPECIFIED TOLERAuCES	

XKB Connection 星创

DESIGN	阿树	VIEW:	MODEL TYPE: SLIDE SWITCH
CHECKED		UNIT: mm/in	PART NO.: SS-1400S-L3
APPROVED		SIZE: A4	DWG NO.: X-SS-1400S-L3

XKB INDUSTRIAL PRECISION CO.,LIMITED

SCALE	PAGE	REVISION
N/A	2/2	A1