REVISIONS					
REV.	ECN NO.	LOCATION	DESCRIPTION	DATE	DESIGN
A0	N/A		INITIAL RELEASE	/	/
A1	N/A		图面升级整理图面	2025.06.23	阿树

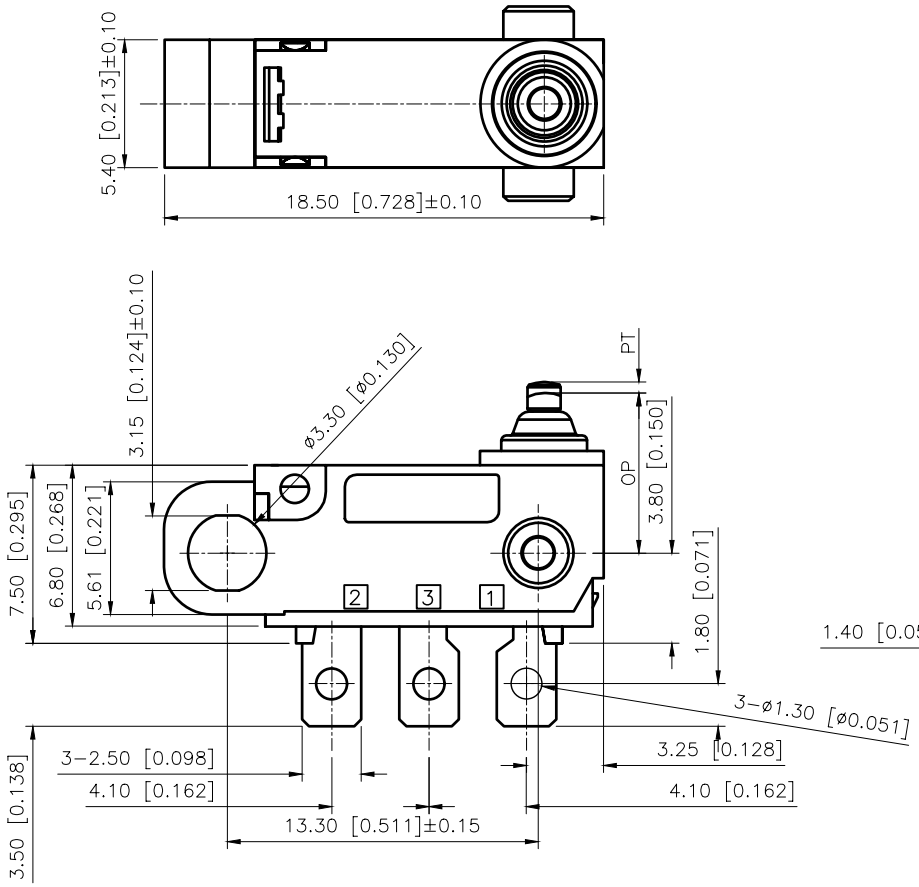

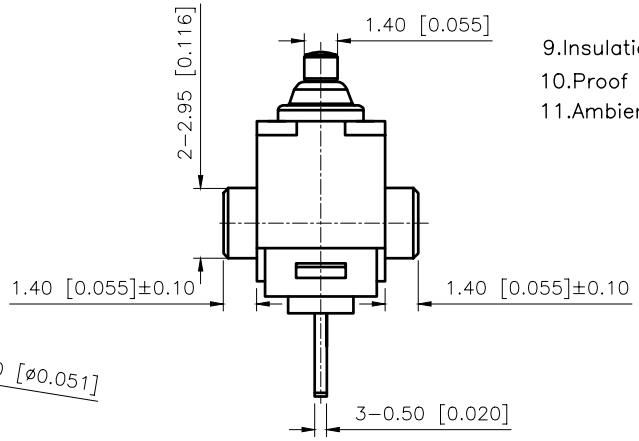

Technical Parameters

1.Electrical Rating: 0.1A 125/250VAC
3A/12VDC;0.1A/48VDC
2.Electrical lifetime:100 000
3.Mechanical lifetime:100 000
4.Contact Resistance: ≤100mΩ
5.Operating force:1.3N MAX
6.Operation Position:6.75±0.2mm
7.Pretravel:0.8mm(MAX)
8.Withstand Voltage:Feet and Feet 500V/5S/5mA
Feet and Shell 1500/5S/5mA
9.Insulation Resistance:≥100MΩ(Test Voltage 500VDC)
10.Proof Tracking Index(PTI):175V
11.Ambient temperature:125°

Waterproof grade:IP67

1	Rubber shell	PA66
2	seal ring	Silica gel
3	base	Brass+PA66
4	According to sincerity	POM
5	Contact moving plate	C5191+AgNi10
6	Strut	SUS301-H

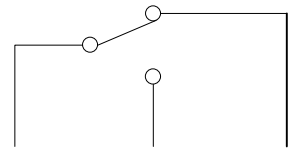

Circuit diagram

AuGLAR	±5°
X.	±0.40
X.x	±0.30
X.xx	±0.20
X.xxx	±0.15
UNSPECIFIED TOLERAuCES	

XKB Connection

DESIGN	阿树	VIEW:	MODEL TYPE: MICRO SWITCH
CHECKED		UNIT: mm/in	PART NO.: DF1-000NS-1
APPROVED		SIZE: A4	DWG NO.: X-DF1-000NS-1

XKB INDUSTRIAL PRECISION CO.,LIMITED

SCALE	PAGE	REVISION
N/A	1/1	A1