REVISIONS					
REV.	ECN NO.	LOCATION	DESCRIPTION	DATE	DESIGN
A0	N/A		INITIAL RELEASE	/	/
A1	N/A			2025.1.14	

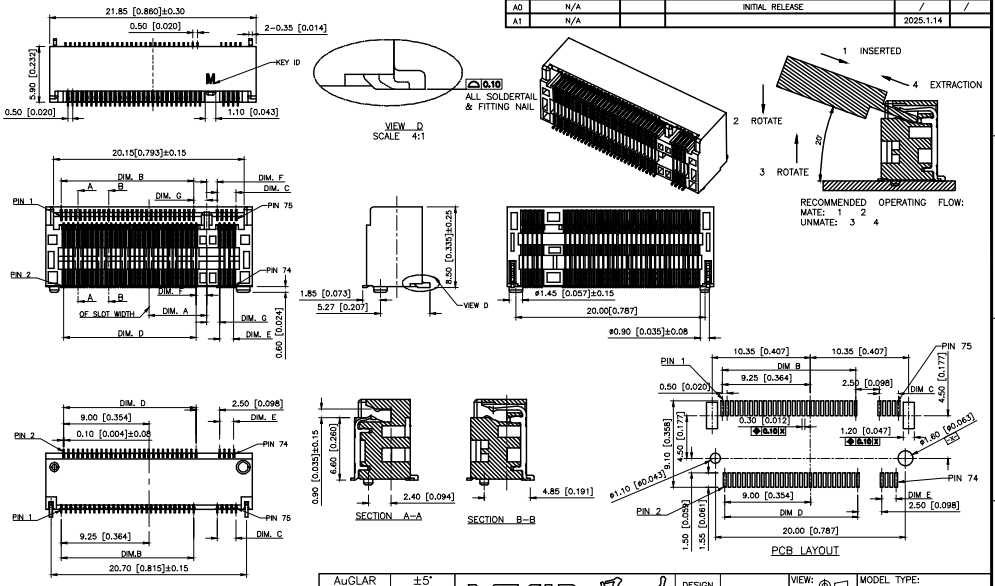

AuGLAR	±5°	XKB Connection	DESIGN	VIEW:	MODEL TYPE: 0.50mm BTB Connector
X.	±0.40		CHECKED	UNIT: mm/in	PART NO.: X1302WVS-67FE-LPV01
X.x	±0.30		APPROVED	SIZE: A4	DWG NO.:
X.xx	±0.20				
X.xxx	±0.15				
UNSPECIFIED TOLERAUCES		XKB INDUSTRIAL PRECISION CO.,LIMITED			SCALE N/A / PAGE 1/3 / REVISION A1

www.helloxkb.com www.helloxkb.cn www.xk-dg.cn

REVISIONS					
REV.	ECN NO.	LOCATION	DESCRIPTION	DATE	DESIGN
A0	N/A		INITIAL RELEASE	/	/
A1	N/A			2025.1.14	

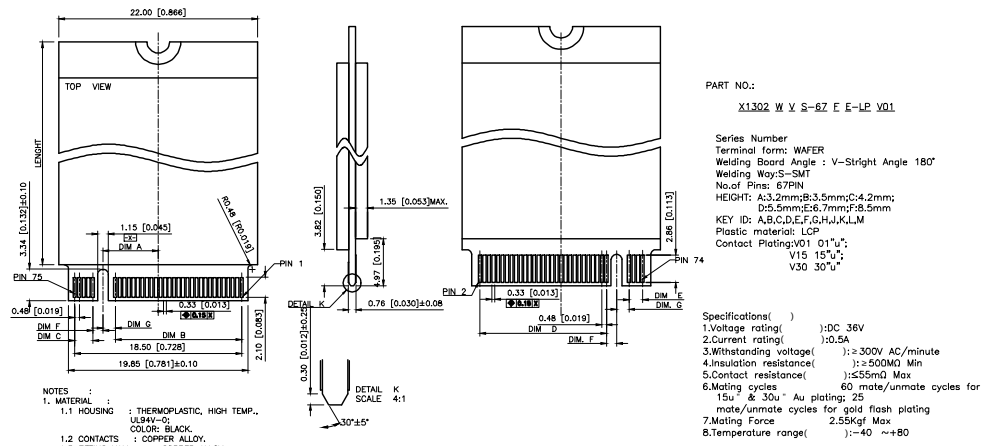

PART NO.:

X1302 W V S-67 F E-LP V01

Series Number
Terminal form: WAFER
Welding Board Angle : V-Stright Angle 180°
Welding Way:S-SMT
No.of Pins: 67PIN
HEIGHT: A:3.2mm;B:3.5mm;C:4.2mm;
D:5.5mm;E:6.7mm;F:8.5mm
KEY ID: A,B,C,D,E,F,G,H,J,K,L,M
Plastic material: LCP
Contact Plating:V01 01"u";
V15 15"u";
V30 30"u"

NOTES :
1. MATERIAL :
1.1 HOUSING : THERMOPLASTIC, HIGH TEMP., UL94V-0; COLOR: BLACK.
1.2 CONTACTS : COPPER ALLOY.
1.3 FITTING NALL : COPPER ALLOY.
2. FINISH :
2.1 CONTACT :
[SEE TABLE] GOLD PLATING ON THE CONTACT AREA.
GOLD FLASH PLATING ON THE SOLDERING AREA.
1.27um~2.54um [50u"~100u"] MIN. NICKEL UNDERPLATING OVERALL
2.2 FITTING NAIL :
2.54um~5.08um [100u"~200u"] MIN. MATTE-TIN PLATING ON THE SOLDERING AREA
1.27um~2.54um [50u"~100u"] MIN. NICKEL UNDERPLATING OVERALL.
3.PACKING SPEC : K-91302-401

Specifications( )
1.Voltage rating( ):DC 36V
2.Current rating( ):0.5A
3.Withstanding voltage( ): ≥ 300V AC/minute
4.Insulation resistance( ): ≥500MΩ Min
5.Contact resistance( ):≤55mΩ Max
6.Mating cycles 60 mate/unmate cycles for 15u" & 30u" Au plating; 25 mate/unmate cycles for gold flash plating
7.Mating Force 2.55Kgf Max
8.Temperature range( ):-40 ~+80

1.375	1.125	1.50	14.00	2.00	14.00	6.125	M	1.125	1.375	9.50	6.00	9.50	6.50	-1.625	F
1.375	1.125	2.50	13.00	3.00	13.00	5.125	L	1.125	1.375	10.50	5.00	10.50	5.50	-2.625	E
1.375	1.125	3.50	12.00	4.00	12.00	4.125	K	1.125	1.375	11.50	4.00	11.50	4.50	-3.625	D
1.375	1.125	4.50	11.00	5.00	11.00	3.125	J	1.125	1.375	12.50	3.00	12.50	3.50	-4.625	C
1.375	1.125	5.50	10.00	6.00	10.00	2.125	H	1.125	1.375	13.50	2.00	13.50	2.50	-5.625	B
1.375	1.125	6.50	9.00	7.00	9.00	1.125	G	1.125	1.375	14.50	1.00	14.50	1.50	-6.625	A
DIM. G	DIM. F	DIM. E	DIM. D	DIM. C	DIM. B	DIM. A	KEY ID	DIM. G	DIM. F	DIM. E	DIM. D	DIM. C	DIM. B	DIM. A	KEY ID

AuGLAR	±5°	XKB Connection	DESIGN	VIEW:	MODEL TYPE: 0.50mm BTB Connector
X.	±0.40		CHECKED	UNIT: mm/in	PART NO.: X1302WVS-67FE-LPV01
X.x	±0.30		APPROVED	SIZE: A4	DWG NO.:
X.xx	±0.20				
X.xxx	±0.15				
UNSPECIFIED TOLERAUCES		XKB INDUSTRIAL PRECISION CO.,LIMITED			SCALE N/A / PAGE 2/3 / REVISION A1

www.helloxkb.com www.helloxkb.cn www.xk-dg.cn

REVISIONS					
REV.	ECN NO.	LOCATION	DESCRIPTION	DATE	DESIGN
A0	N/A		INITIAL RELEASE	/	/
A1	N/A			2025.1.14	

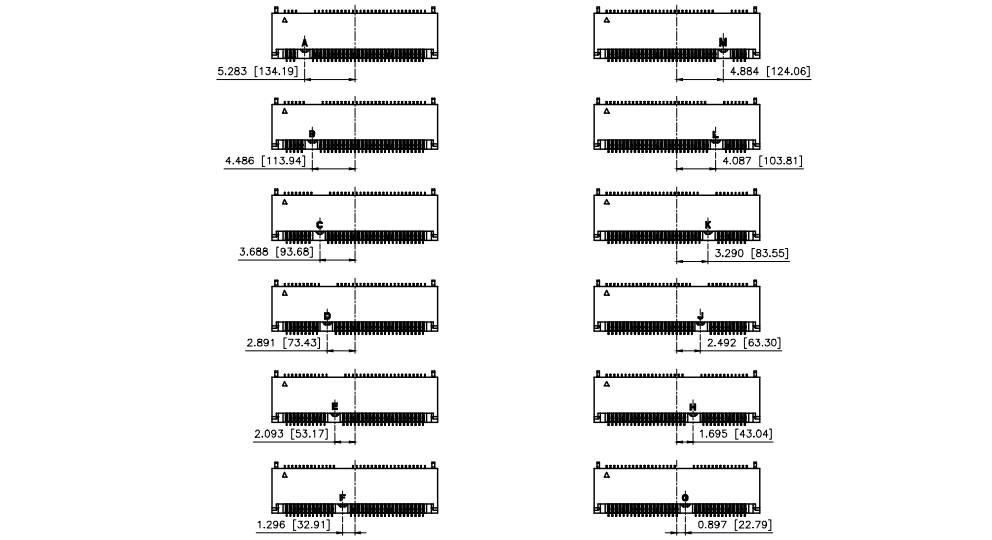

AuGLAR	±5°	XKB Connection	DESIGN	VIEW:	MODEL TYPE: 0.50mm BTB Connector
X.	±0.40		CHECKED	UNIT: mm/in	PART NO.: X1302WVS-67FE-LPV01
X.x	±0.30		APPROVED	SIZE: A4	DWG NO.:
X.xx	±0.20				
X.xxx	±0.15				
UNSPECIFIED TOLERAUCES		XKB INDUSTRIAL PRECISION CO.,LIMITED			SCALE N/A / PAGE 3/3 / REVISION A1

www.helloxkb.com www.helloxkb.cn www.xk-dg.cn