REVISIONS					
REV.	ECN NO.	LOCATION	DESCRIPTION	DATE	DESIGN
A1	N/A		材质变更，图面升级整理图面	2024.9.29	阿树
A2	N/A		pin脚尺寸及脚距尺寸变更	2024.11.29	阿树

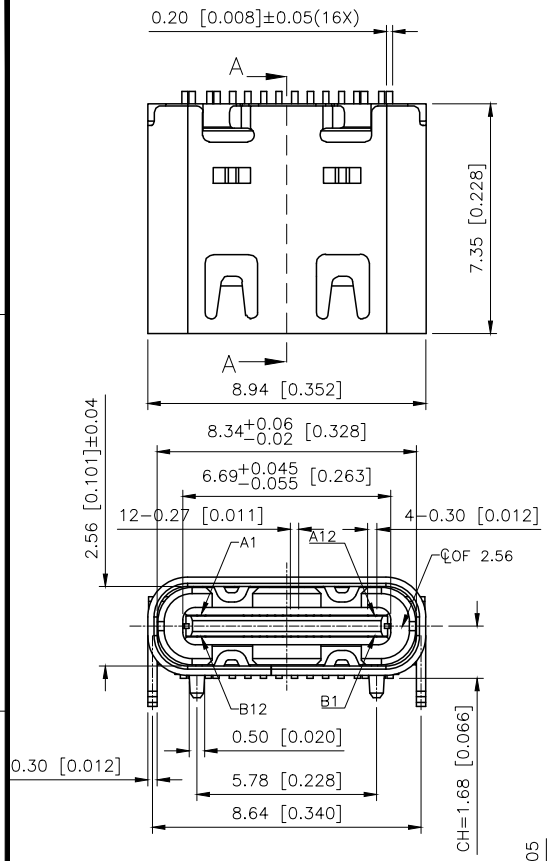

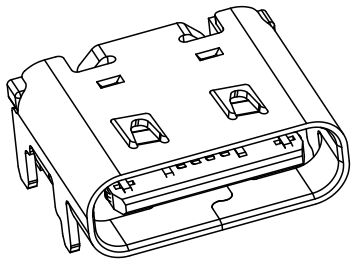

3D VIEW

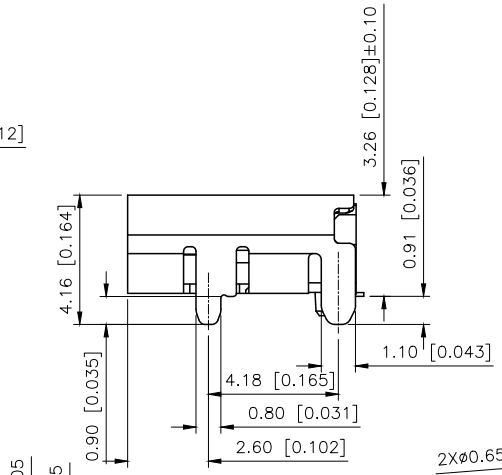

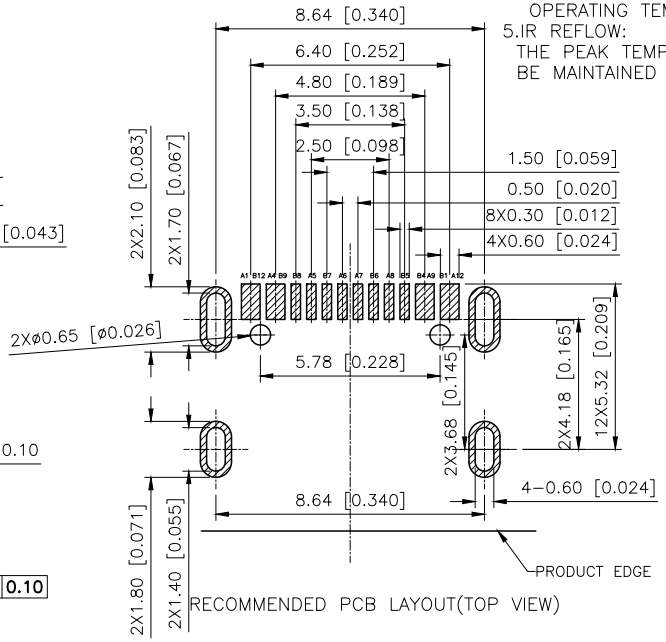

RECOMMENDED PCB LAYOUT(TOP VIEW)

NOTE:
1.MATERIAL SPECIFICATION:
1−1.HOUSING:HIGH TEMPRATURE RESISANT PLASTIC,UL94 V−0
1−2.CONTACTS: COPPER ALLOY
1−3.MID PLATE:STAINLESS STEEL
1−4.FRONT SHELL:STAINLESS STEEL
2.PLATING SPECIFICATION:
2.1.INSERTION FORCE: 5~20N.
2.2.REMOVAL FORCE: 8~20N.
2.3.DURABILITY: 10000 CYCLES.
3. ELECTRICAL PERFORMANCE:
3−1.CURRENT RATING:5.0A ;VOLTAGE RATING:20V
3−2.LLCR:
VBUS & GND PINS AND OTHER PINS: 40mΩ/PIN MAX.
SHIELD: 50mΩ/MAX.
LLCR MAX. CHANGE OF ALL PINS: 10mΩ.
3−3.INSULATION RESISTANCE: 100MΩ MIN
3−4.DIELECTRIC WITHSTAND VOLTAGE,AC 100V FOR 1 MINUTE.
4.ENVIRONMENTAL PERFORMANCE:
OPERATING TEMPERATURE: −25°C~+85°C.
5.IR REFLOW:
THE PEAK TEMPERATURE ON THE BOARD SHALL BE MAINTAINED FOR 10 SECONDS AT 260°C.

U263−163N−4BS1735

1:1u"
3:3u"

G:Green
B:Black
O:Orange
W:Whit
B:Blue

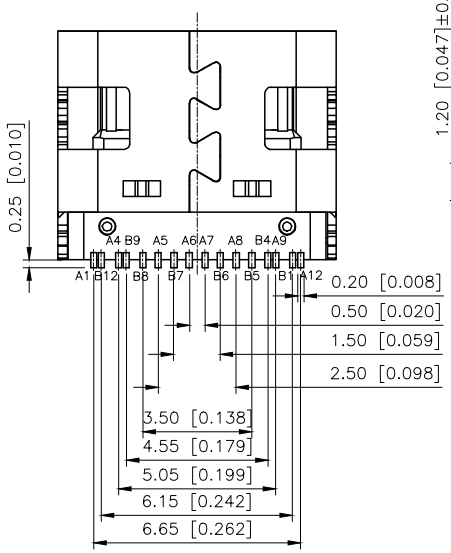

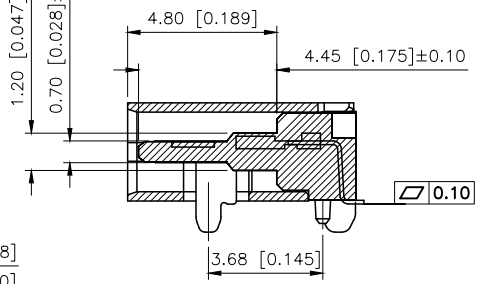

SECTION:A−A
SCALE 1:1

PIN	SIGNAL NAME	PIN	SIGNAL NAME
A1	GND	B12	GND
A4	VBUS	B9	VBUS
A5	CC1	B8	SBU2
A6	DP1	B7	DN2
A7	DN1	B6	DP2
A8	SBU1	B5	CC2
A9	VBUS	B4	VBUS
A12	GND	B1	GND

AuGLAR	±5°
X.	±0.40
X.x	±0.30
X.xx	±0.20
X.xxx	±0.15
UNSPECIFIED TOLERAuCES	

XKB Connection 星创

DESIGN	阿树	VIEW:	MODEL TYPE: 3.1 TYPE C
CHECKED		UNIT: mm/in	PART NO.: U263−163N−4BS1735
APPROVED		SIZE: A4	DWG NO.: X−U263−163N−4BS1735

XKB INDUSTRIAL PRECISION CO.,LIMITED

SCALE	PAGE	REVISION
N/A	1/1	A2