REVISIONS					
REV.	ECN NO.	LOCATION	DESCRIPTION	DATE	DESIGN
A0	N/A		INITIAL RELEASE	/	/
A1	N/A		图面升级整理图面	2025.06.24	阿树

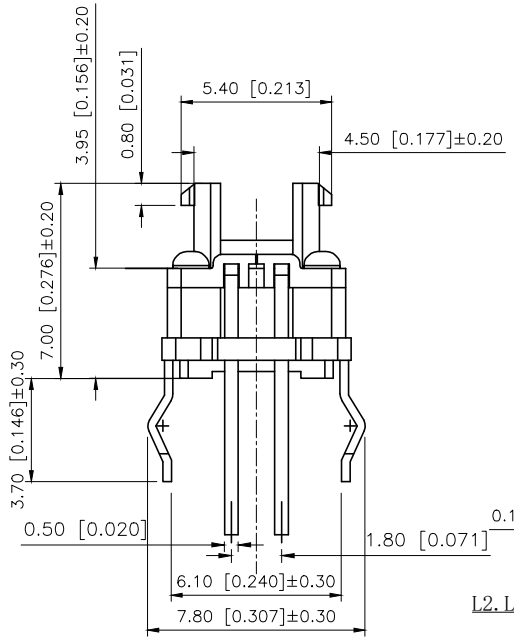

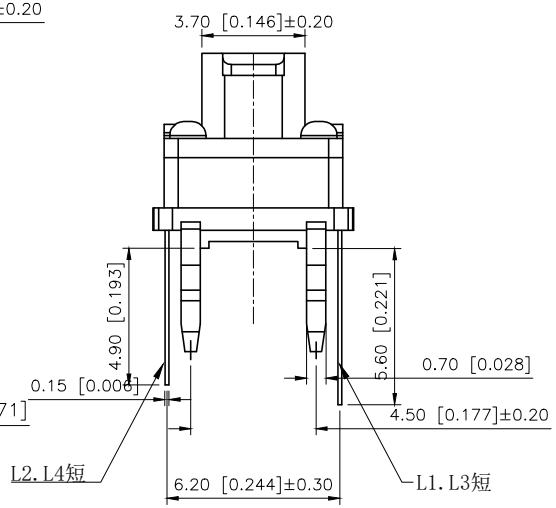

电原理图

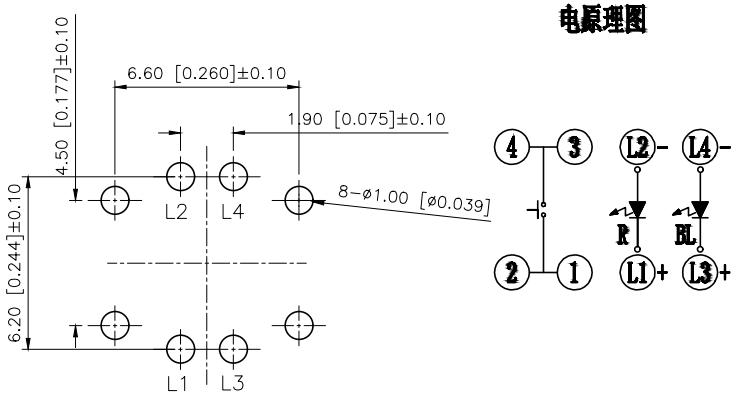

PCB LAYOUT

Specifications(规格):
1.Climate Grade(气候等级): −25℃~+75℃
2.Voltage rating(额定电压):30V DC,30mA
3.Withstanding voltage(耐压值):≥250V AC/minute
4.Insulation resistance(绝缘电阻):≥100MΩ Min
5.Contact resistance(接触电阻):≤30mΩ Max
6.Life（使用寿命）: 100,000 cycles Min
7.Operating force（动作力）: 260gf±50gf
8.Salt minst.Test(盐雾测试):12±1hours

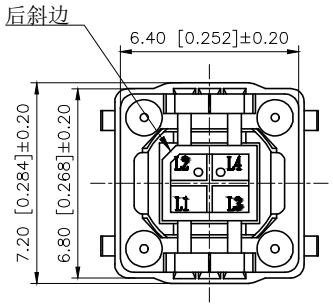

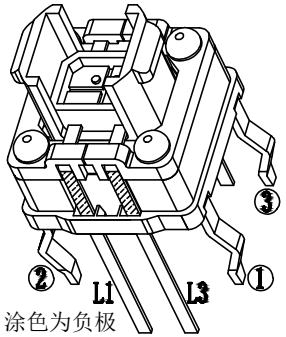

ITEM	PAPT NAMF	QTY	MATERIAL	FINISHING/COLOR	Note
6	Double LED light	1		Transparent	A0708双色光
5	Double light cover	1	PA66	Black	A0708
4	Double light button	1	PA66	Ceramic white	A0708
3	Shrapnel	1	F.ag	Ag Plated	借0601(ø5)
2	Base	1	PA66	Black	A0708
1	Key shares	1	H62	Ag Plated	借A0801

AuGLAR	±5°
X.	±0.40
X.x	±0.30
X.xx	±0.20
X.xxx	±0.15
UNSPECIFIED TOLERAuCES	

XKB 星坤 Connection

DESIGN	阿树	VIEW:	MODEL TYPE: LED SWITCH
CHECKED		UNIT: mm/in	PART NO.: TM-010-M1-RBL
APPROVED		SIZE: A4	DWG NO.: X-TM-010-M1-RBL

XKB INDUSTRIAL PRECISION CO.,LIMITED

SCALE	PAGE	REVISION
N/A	1/1	A1

www.helloxkb.com www.helloxkb.cn www.xk-dg.cn