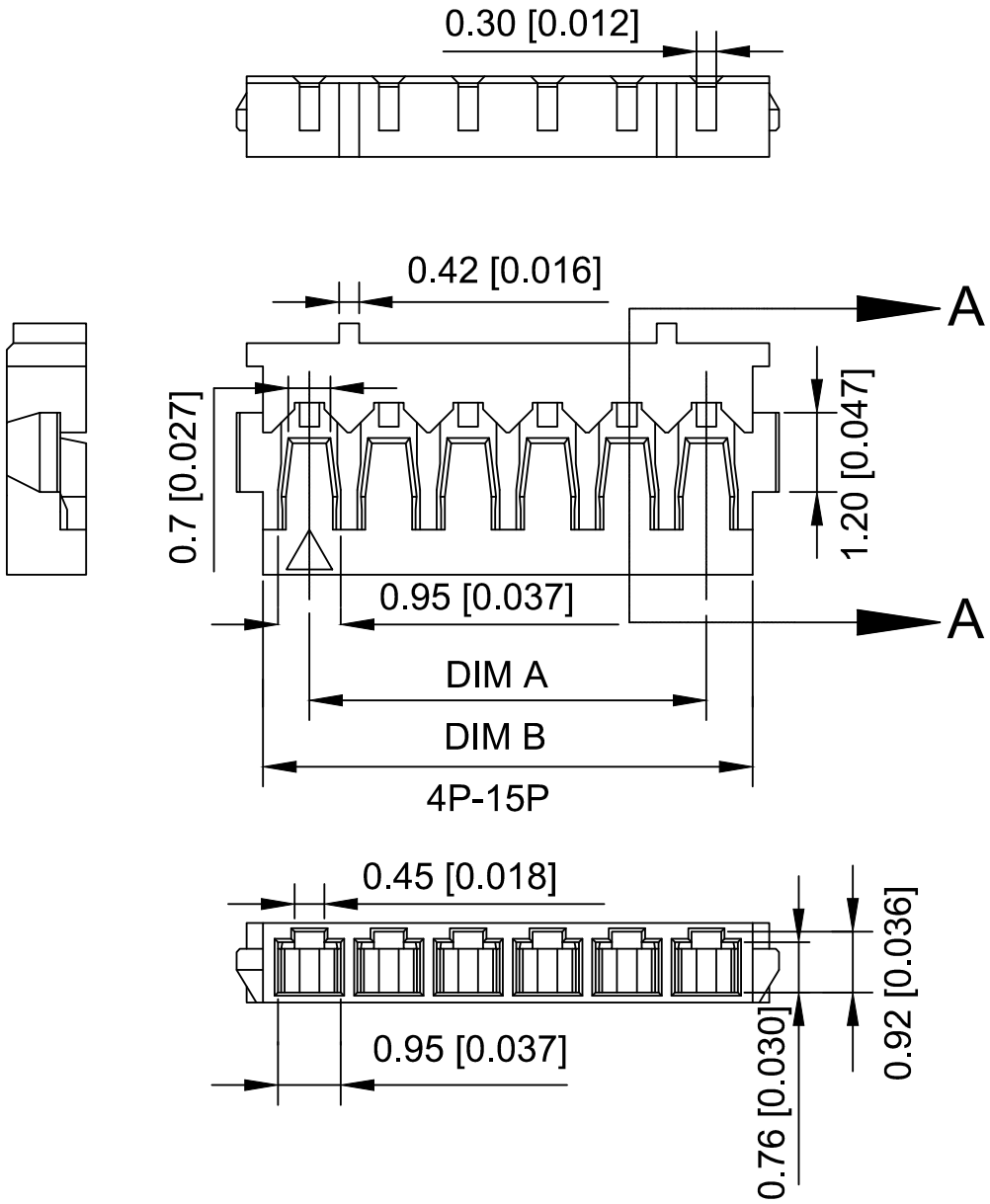

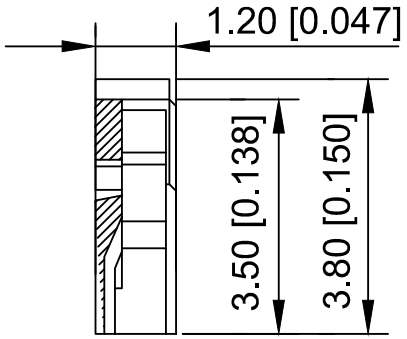

SECTION A-A

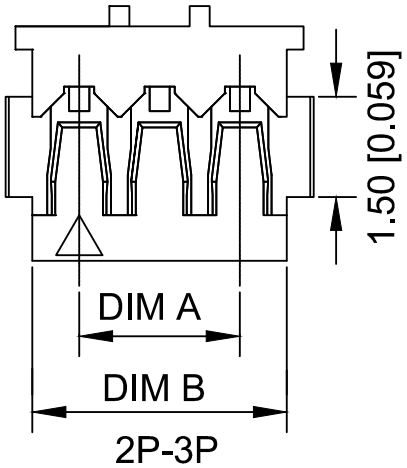

■ Specifications :

- Voltage rating: 50 V AC / DC
- Current rating: 2A AC / DC
- Withstanding voltage: 500V AC/minute
- Temperature range: -25°C~+85°C
- Insulation resistance: 100MΩ Min
- Contact resistance: 20mΩ Max
- After environmental testing : 20mΩ Max

X1203 H-02- N0 W
① ② ③ ④ ⑤

① Series No.
② Category : H-HSG
③ Row No.-Pin No.: XX-02P~03P
④ Material : N0-Nylon66 UL94V-0
⑤ Color:W-White;BK-Black

PIN	Dimensisons (mm)	
	A	B
1	/	1.40
2	1.20	2.60
3	2.40	3.80
4	3.60	5.00
5	4.80	6.20
6	6.00	7.40
7	7.20	8.60
8	8.40	9.80
9	9.60	11.00
10	10.80	12.20
11	12	13.40
12	13.20	14.60
13	14.40	15.80
14	15.60	17.00
15	16.80	18.20

MARK	DESCRIPTION	DATE	REVISED	APPROVED
ΔX				
ΔX				
ΔX				

REVISIONS

ANGLAR	±5°
L≤ 4	±0.2
4<L≤ 16	±0.3
16<L≤ 63	±0.4
L> 63	±0.5

UNSPECIFIED TOLERANCES

www.helloxkb.com www.helloxkb.cn www.xk-dg.cn

XKB

DSND		SCALE: N/A
DWN		VIEW:
CHKD		UNIT: mm/in
APPD		SIZE: A4

XKB INDUSTRIAL PRECISION CO.,LIMITED

MODEL TYPE:

PART NO.: X1203H-02-N0W

DWG NO.: X-X1203H-02-N0W

WEIGHT	SHEET	REVISION
	1/1	A0