REVISIONS					
REV.	ECN NO.	LOCATION	DESCRIPTION	DATE	DESIGN
A0	N/A		INITIAL RELEASE	/	/
A1	N/A		图面升级整理图面	2025.06.06	阿树

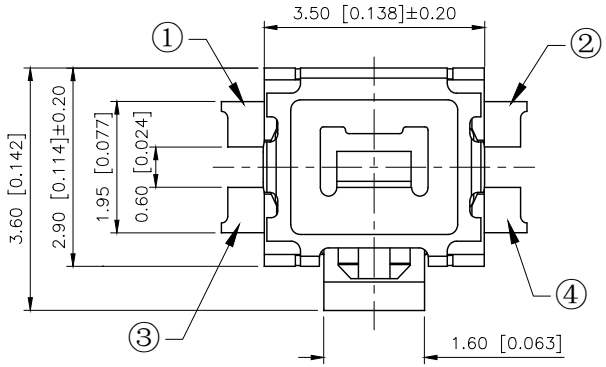

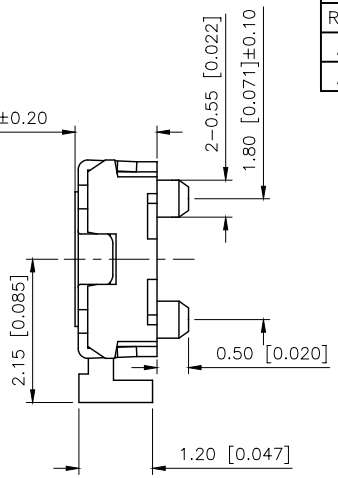

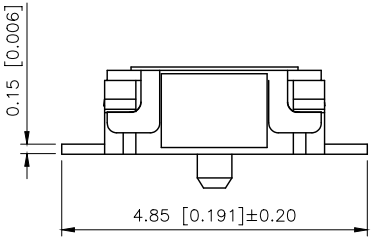

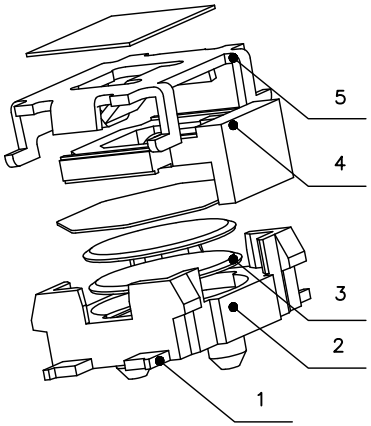

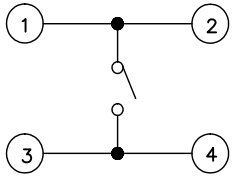

CIRCUIT DIAGRAM

SPECIFICATION
Contact Rating: 50mA,12V DC
Contact Resistance: 100mΩ max
Insulation Resistance: 100MΩ min.500V DC
Dielectric Strength: 250V AC/1minute
Operating Temp: −30℃~+85℃
Storage Temp: −30℃~+80℃
Operating Temp: 100,000cycles

PAPT NO	TS−1186F−C−A
Operating Force	B:160gf C:260gf
Height	H:3.6
Fixed column	A:With B:Without

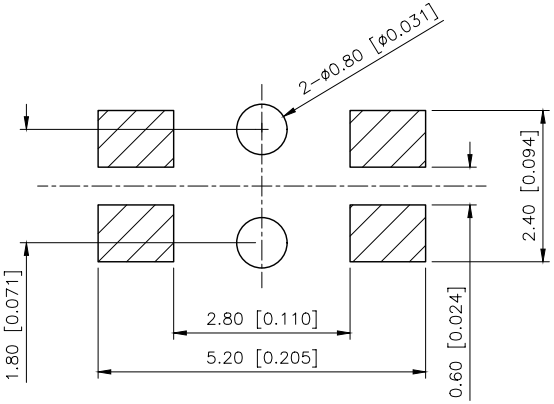

P.C.B LAYOUT

ITEM	PAPT NAMF	QTY	MATERIAL	FINISHING
⑤	Cover	1	SUS	
④	Keystake	1	Pa46	Black
③	Contact	1	F.ag/Sus	
②	Housing	1	LCP	Black
①	Terminal	1	Brass（0.30t）	Plating silvering

AuGLAR	±5°
X.	±0.40
X.x	±0.30
X.xx	±0.20
X.xxx	±0.15
UNSPECIFIED TOLERAuCES	

XKB Connection

DESIGN	阿树	VIEW:	MODEL TYPE: TACT SWITCH
CHECKED		UNIT: mm/in	PART NO.: TS−1186F−C−A
APPROVED		SIZE: A4	DWG NO.: TS−1186F−C−A

XKB INDUSTRIAL PRECISION CO.,LIMITED

SCALE	PAGE	REVISION
N/A	1/1	A1

www.helloxkb.com www.helloxkb.cn www.xk-dg.cn