REVISIONS					
REV.	ECN NO.	LOCATION	DESCRIPTION	DATE	DESIGN
A1	N/A		产品外观变更，图面升级整理图面	2025.2.25	阿树
A2	N/A		料号描述修正	2025.05.12	阿树

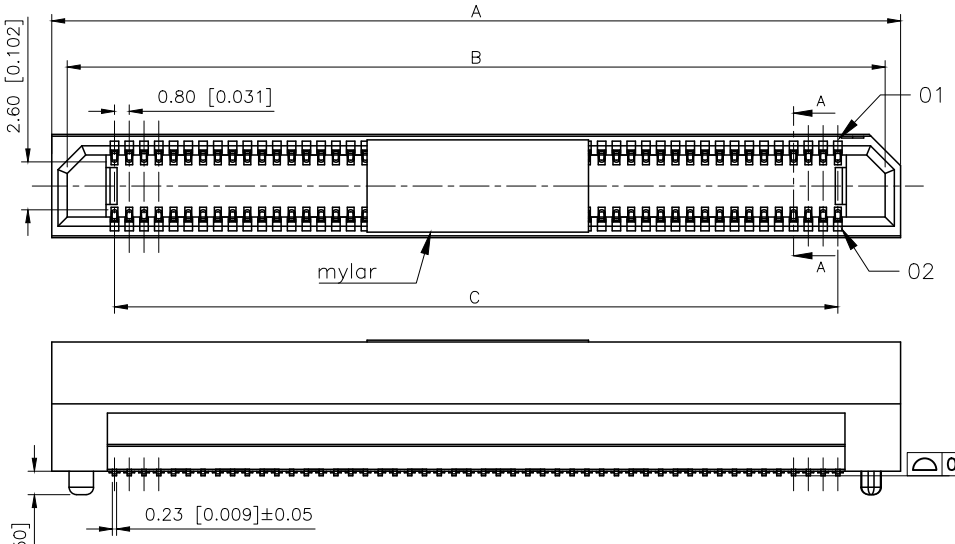

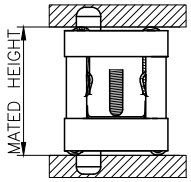

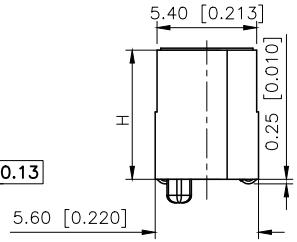

Specifications:
规格：
Voltage rating:300V AC/DC
额定电压：300V AC/DC
Current rating:1A AC/DC
额定电流：1A AC/DC
Withstanding voltage:500V AC/minute
耐受电压：500V AC/分钟
Temperature range:−55℃−+125℃
温度范围：−55℃−+125℃
Insulation resistance:1000MΩ min
绝缘电阻：1000MΩ Min
Contact resistance:40mΩ Max
接触电阻：40mΩ Max

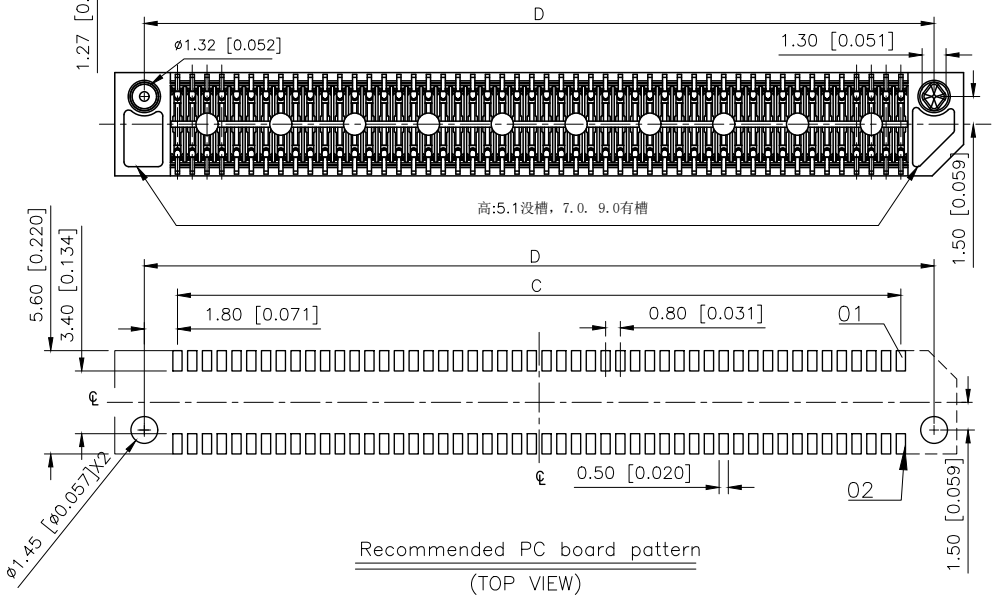

PART NO.:

X0811 F V S−30 B S−LP V01
① ② ③ ④ ⑤ ⑥ ⑦ ⑧ ⑨

①Series No
②Category:F−Female
③Welding Board Angle:V−Stright 180°
④Welding Way: S−SMT
⑤Row No−Pin No:XX−10Pin−200Pin
⑥Height:A=5.0; B=7.0; C=9.0;
⑦Special No:S−With positioning Columm
⑧Material:LP−LCP UL 94V−0
⑨Plating:V01−Gold Flash

HEIGHT	H
5.00	5.10
7.00	7.00
9.00	9.00

Poles	A	B	C	D
10	10.00	8.20	3.20	6.80
20	14.00	12.20	7.20	10.80
22	14.80	13.00	8.00	11.60
24	15.60	13.80	8.80	12.40
26	16.40	14.60	9.60	13.20
30	18.00	16.20	11.20	14.80
40	22.00	20.20	15.20	18.80
50	26.00	24.20	19.20	22.80
60	30.00	28.20	23.20	26.80
70	34.00	32.20	27.20	30.80
80	38.00	36.20	31.20	34.80
100	46.00	44.20	39.20	42.80
120	54.00	52.20	47.20	50.80
140	62.00	60.20	55.20	58.80
150	66.00	64.20	59.20	62.80
200	86.00	84.20	79.20	82.00

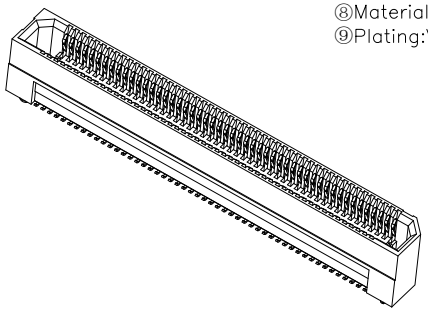

MATED HEIGHT					
ERF8 LEAD STYLE	ERM8 LEAD STYLE				
	2.00	3.00	5.00	8.00	9.00
5.00	7.00	8.00	10.00	13.00	14.00
7.00	9.00		12.00	15.00	16.00
9.00	11.00		14.00	17.00	18.00

X0811FVS−30BS−LPV01	LCP	Phosphor Bronze	X0811F
PART NO	Material	Material(Pin)	Suitable XKB Female

AuGLAR	±5°
X.	±0.40
X.x	±0.30
X.xx	±0.20
X.xxx	±0.15
UNSPECIFIED TOLERAuCES	

XKB Connection 星创

DESIGN	阿树	VIEW:	MODEL TYPE: 0.8mm BTB Style Connector
CHECKED		UNIT: mm/in	PART NO.: X0811FVS−30BS−LPV01
APPROVED		SIZE: A4	DWG NO.: 4X−X0811FVS−30BS−LPV01

XKB INDUSTRIAL PRECISION CO.,LIMITED

SCALE	PAGE	REVISION
N/A	1/1	A1