REVISIONS					
REV.	ECN NO.	LOCATION	DESCRIPTION	DATE	DESIGN
A0	N/A		INITIAL RELEASE	2025.07.29	阿树
/	N/A		/	/	/

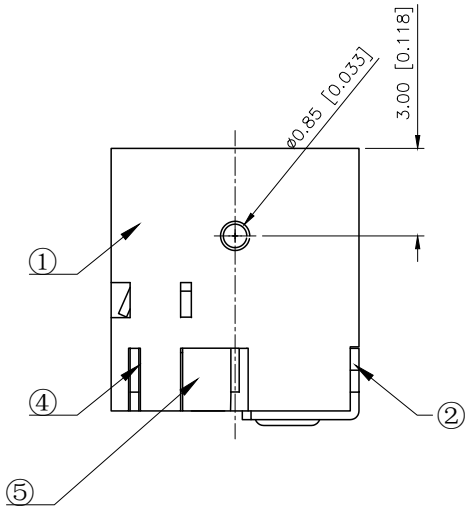

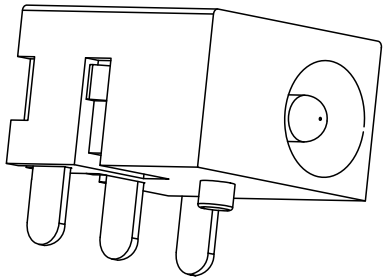

SPECIFICATIONS:
1.Voltage rating: 30V 0,5A
2.Contact resistance: ≤30mΩ
3.Insulation resistance: ≥100MΩ
4.Withstanding voltage: AC500V(50HZ)/min
5.Insertion and extraction force: 3~20N
6.Temperature range:−30℃~+70℃
7.Mating cycles: 5.000次

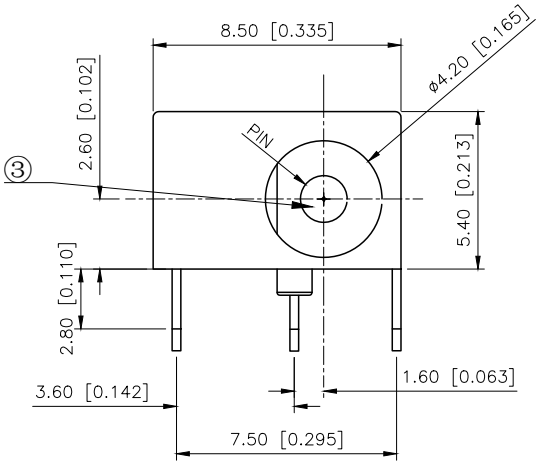

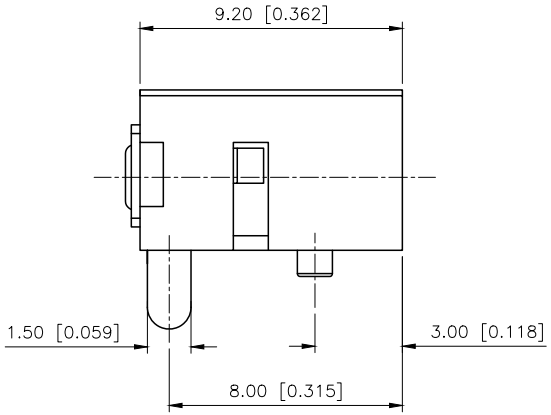

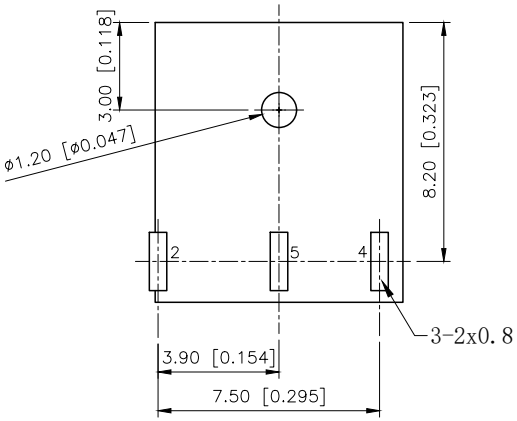

PCB LAYOUT

NO	NAME	QTY	MATERIAL	Remark
5	Inserts	1	H62 Brass band (Y) =0.30mm	Ag Plated
4	Shrapnel	1	Phosphor Bronze Strip T=0.30mm	Ag Plated
3	Pin	1	H62 Brass rods	
2	Plain	1	H62 Brass band (Y) =0.30mm	Ag Plated
1	Pedestal	1	PBT	Black

UNSPECIFIED TOLERAuCES	
AuGLAR	±5°
X.	±0.40
X.x	±0.30
X.xx	±0.20
X.xxx	±0.15

XKB Connection

XKB INDUSTRIAL PRECISION CO.,LIMITED

DESIGN	阿树	VIEW:	MODEL TYPE: DC POWER JACK
CHECKED		UNIT: mm/in	PART NO.: DC-006D-1.65
APPROVED		SIZE: A4	DWG NO.: X-DC-006D-1.65

SCALE	PAGE	REVISION
N/A	1/1	/

www.helloxkb.com www.helloxkb.cn www.xk-dg.cn