HF

REVISIONS					
REV.	ECN NO.	LOCATION	DESCRIPTION	DATE	DESIGN
A1	N/A			2025.09.17	
A2	ECN-P-2025120302			2025.12.03	

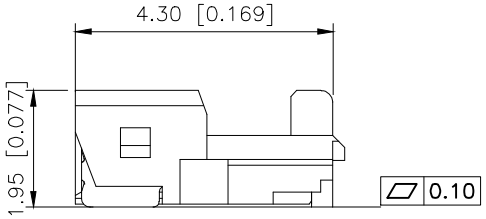

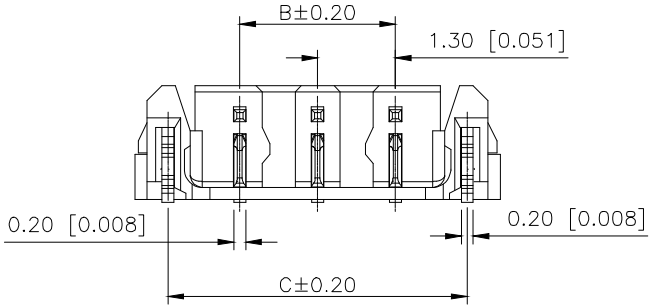

Specifications:

Voltage rating:30V AC/DC
30V AC/DC
Current rating:3A AC/DC
3A AC/DC
Withstanding voltage:500V AC/minute
500V AC/
Temperature range:-40 -+125
-40 -+125
Insulation resistance:100MΩ min
100MΩ Min
Contact resistance:20mΩ Max
20mΩ Max

PART NO.:

X2011 W R S-12-4T V01 BK

Series No
Category:W-Wafer
Welding Board Angle:V-Stright 180°
Welding Way: S-SMT
Row No.Pin No:XX-02~12Pin
Material:4T-PA4T UL94V-0
Planting:V01-Gold Flash
Color:Blank-Natural Color;BK-Black

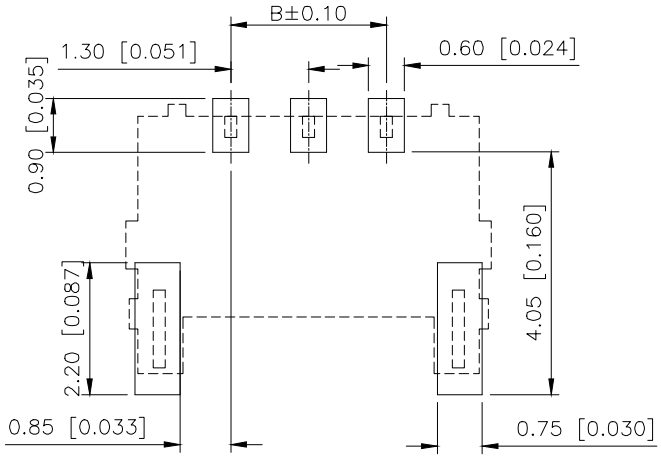

Recommended PCB Layout
General Tolerance:±0.05

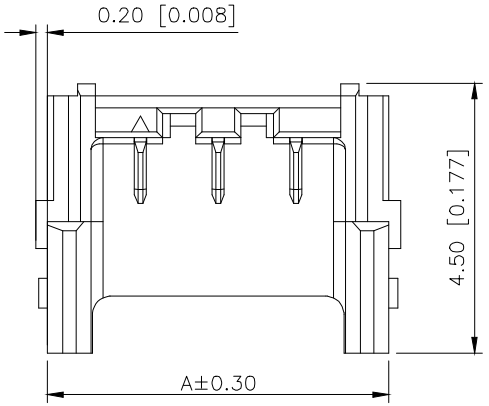

3~12 Pin Shape

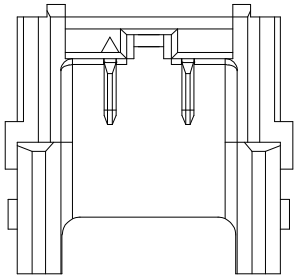

02 Pin Shape

Poles	Dimensions(mm)			Poles	Dimensions(mm)		
	A	B	C		A	B	C
02	4.40	1.30	3.70	08	12.20	9.10	11.50
03	5.70	2.60	5.00	09	13.50	10.40	12.80
04	7.00	3.90	6.30	10	14.80	11.70	14.10
05	8.30	5.20	7.60	11	16.10	13.00	15.40
06	9.60	6.50	8.90	12	17.40	14.30	16.70
07	10.90	7.80	10.20		/		

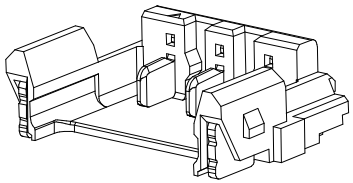

PART NO	Material	Plating	Suitable XKB Housing
X1300WRS-XX-4TV01 X1300WRS-12-4TV01BK	High conductivity copper	Gold Flash	X1300H

AuGLAR	±5°
X.	±0.40
X.x	±0.30
X.xx	±0.20
X.xxx	±0.15
UNSPECIFIED TOLERAuCES	

XKB Connection 星创

DESIGN		VIEW:	MODEL TYPE: 1.3mm Crimp Style Connector
CHECKED		UNIT: mm/in	PART NO.: X1300WRS-12-4TV01BK
APPROVED		SIZE: A4	DWG NO.:

XKB INDUSTRIAL PRECISION CO.,LIMITED

SCALE	PAGE	REVISION
N/A	1/1	A2