REVISIONS					
REV.	ECN NO.	LOCATION	DESCRIPTION	DATE	DESIGN
A0	N/A		INITIAL RELEASE	/	/
A1	N/A		新增开孔图定位柱直径尺寸，图面升级整理图面	2024.11.15	阿树

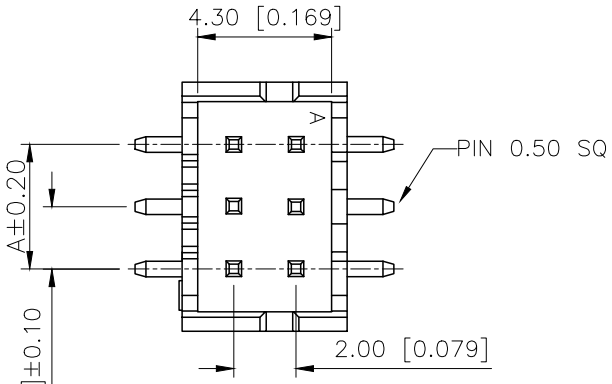

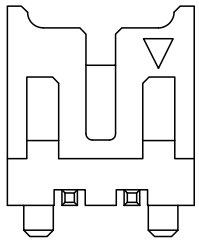

2P视图

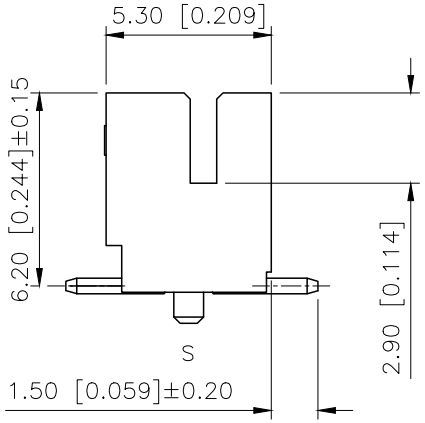

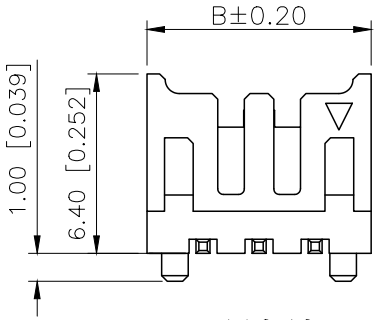

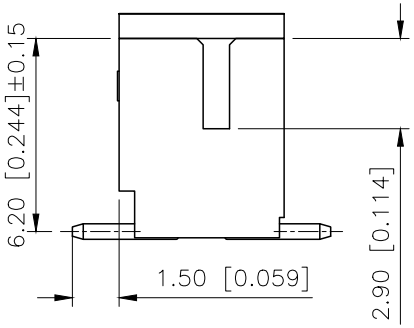

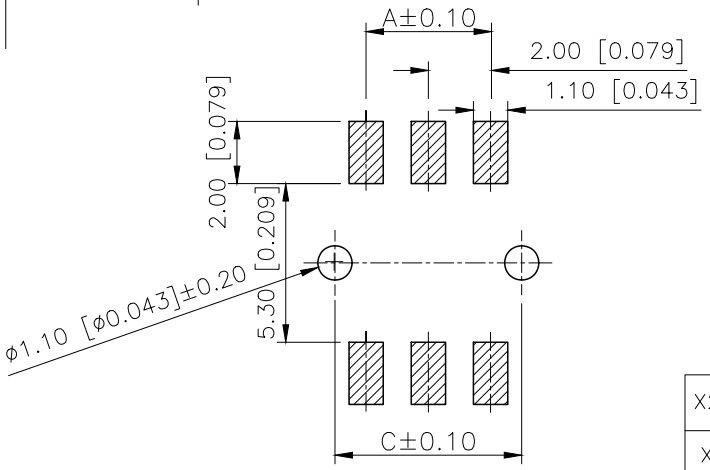

PCB LAYOUT

■SPECIFICATIONS
- Voltage rating:250V AC/DC
- Current rating:3A AC/DC
- Withstanding Voltage:800V AC/minute
- Temperature range:−40°C~+125°C
- Insulation resistance:≥1000MΩ
- Contact resistance:≤10mΩ
- After environmental testing:≤20mΩ

PART NO.:

X2026 W V S−2x11 S−9T SN XX
① ② ③ ④ ⑤ ⑥ ⑦ ⑧ ⑨

①Series No
②Category:W−Wafer
③Welding Board Angle:RV−Stright 180°
④Welding Way:S−SMT
⑤Row No.Pin No:2xXX−2x02~2x19Pin
⑥S−With the column
⑦Material:9T−PA9T 94V−0
⑧Plating Category:SN−Bright Tin Plating
⑨Color:Blank−Natural Color

poles	Dimensions(mm)			poles	Dimensions(mm)			Poles	Dimensions(mm)		
	A	B	C		A	B	C		A	B	C
2x02	2.00	6.00	4.00	2x09	16.00	20.00	18.00	2x16	30.00	34.00	32.00
2x03	4.00	8.00	6.00	2x10	18.00	22.00	20.00	2x17	32.00	36.00	34.00
2x04	6.00	10.00	8.00	2x11	20.00	24.00	22.00	2x18	34.00	38.00	36.00
2x05	8.00	12.00	10.00	2x12	22.00	26.00	24.00	2x19	36.00	40.00	38.00
2x06	10.00	14.00	12.00	2x13	24.00	28.00	26.00				
2x07	12.00	16.00	14.00	2x14	26.00	30.00	28.00				
2x08	14.00	18.00	16.00	2x15	28.00	32.00	30.00				

PART NO	Material	Material(pin)	Finish(Pin)	Suitable XKB Terminal
X2026WVS−2x11S−9TSN	PA9T UL 94V−0	Brass	Tin−Plated	X2026H−A
X2026WVS−2xXX−9TSN	PA9T UL 94V−0			X2026H−A

AuGLAR	±5°
X.	±0.40
X.x	±0.30
X.xx	±0.20
X.xxx	±0.15
UNSPECIFIED TOLERAuCES	

XKB Connection 星创

DESIGN	阿树	VIEW:	MODEL TYPE: 2.00mm Crimp Style Connector
CHECKED		UNIT: mm/in	PART NO.: X2026WVS−2x11S−9TSN
APPROVED		SIZE: A4	DWG NO.:

XKB INDUSTRIAL PRECISION CO.,LIMITED

SCALE	PAGE	REVISION
N/A	1/1	A1