REVISIONS					
REV.	ECN NO.	LOCATION	DESCRIPTION	DATE	DESIGN
A0	N/A		INITIAL RELEASE	/	/
A1	N/A		图面升级整理图面	2025.06.17	阿树

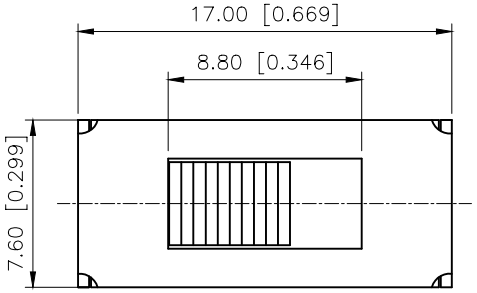

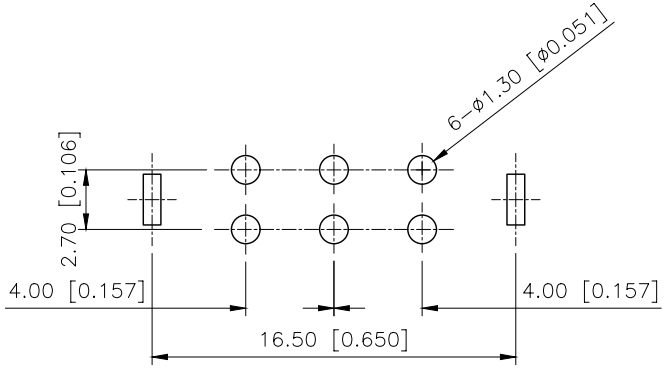

PCB LAYOUT

SS22F07-L5

L(mm)
2~10

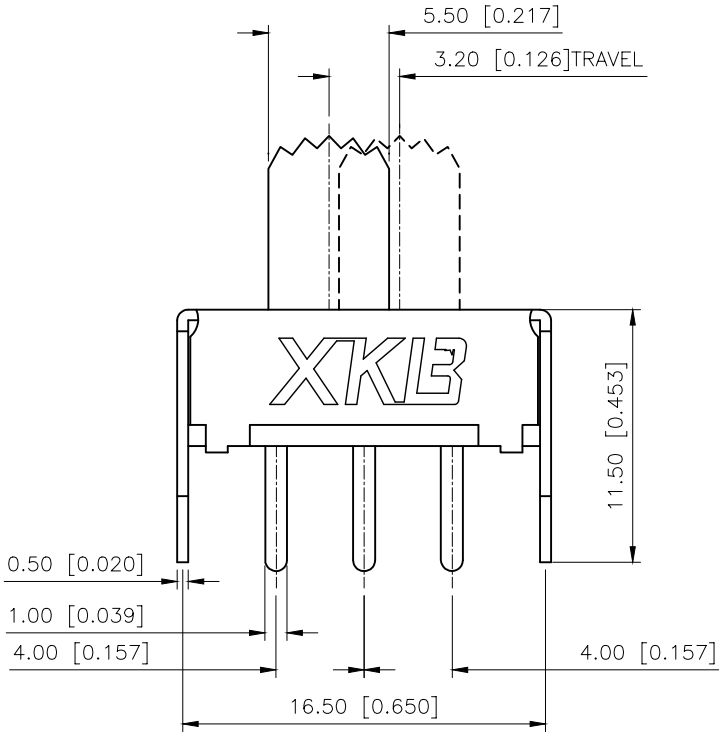

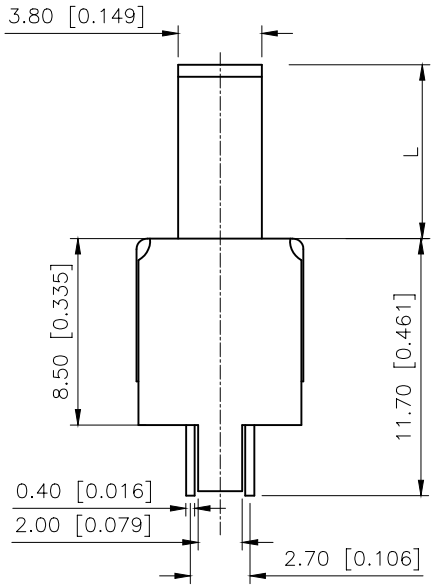

RATING	0.3A 50V DC
CIRCUIT	1P2T
CONTACT RESISITANCE	100MΩ MAX
TRAVEL	2.0MM
OPERATING FORCE	250±100gf
OPERATING LIFE	10000

AuGLAR	±5°
X.	±0.40
X.x	±0.30
X.xx	±0.20
X.xxx	±0.15
UNSPECIFIED TOLERAuCES	

XKB Connection 星创

DESIGN	阿树	VIEW:	MODEL TYPE: SLIDE SWITCH
CHECKED		UNIT: mm/in	PART NO.: SS22F07L5
APPROVED		SIZE: A4	DWG NO.: X-SS22F07L5

XKB INDUSTRIAL PRECISION CO.,LIMITED

SCALE	PAGE	REVISION
N/A	1/1	A1

www.helloxkb.com www.helloxkb.cn www.xk-dg.cn