| REVISIONS | | | | | |
|---|---|---|---|---|---|
| REV. | ECN NO. | LOCATION | DESCRIPTION | DATE | DESIGN |
| A0 | N/A | | INITIAL RELEASE | / | / |
| A1 | N/A | | 图面升级整理图面 | 2025.06.03 | 阿树 |

| Code-x | H | Code-x | H |
|---|---|---|---|
| A | 4.30 | O | 11.00 |
| B | 4.50 | P | 11.50 |
| C | 5.00 | Q | 12.00 |
| D | 5.50 | R | 12.50 |
| E | 6.00 | S | 13.00 |
| F | 6.50 | T | 13.50 |
| G | 7.00 | U | 14.00 |
| H | 7.50 | V | 15.00 |
| I | 8.00 | W | 15.50 |
| J | 8.50 | X | 16.00 |
| K | 9.00 | Y | 16.50 |
| L | 9.50 | Z | 17.00 |
| M | 10.00 | 18 | 18.00 |
| N | 10.50 | 19 | 19.00 |

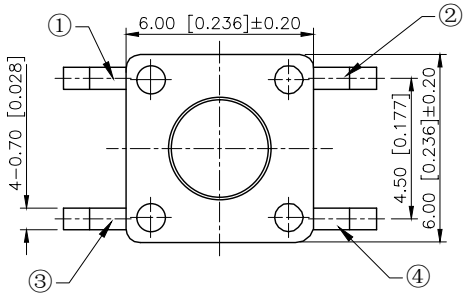


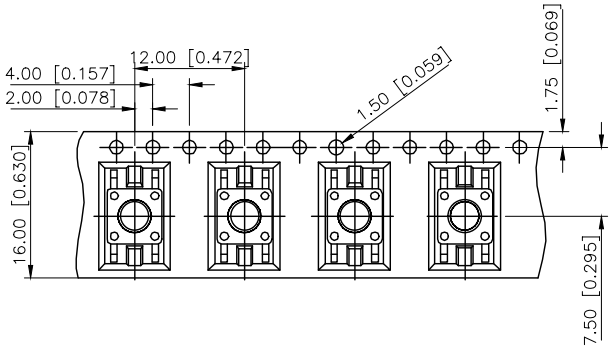


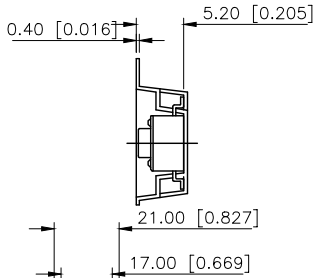


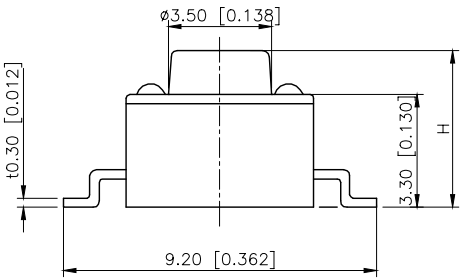


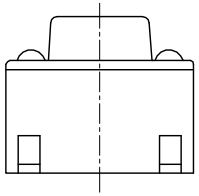

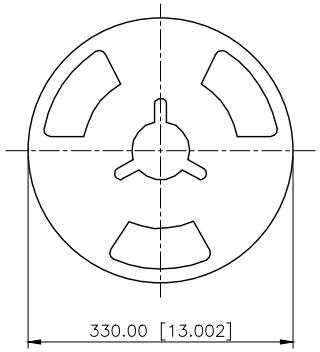


PACKING REEL TYPE

SPECIFICATION
Contact Rating: 50mA,12V DC
Contact Resistance: 100mΩ max
Insulation Resistance: 100MΩ min.500V DC
Dielectric Strength: 250V AC/1minute
Travel: 0.25mm
Operating Temp: -40℃~+80℃
Storage Temp: -40℃~+80℃

| PAPT NO | TS-1102SD-C-H-B |
|---|---|
| Operating Force | A:100gf B:160gf C:260gf |
| Height | Code-x |
| Color | B:Black BR:Brown R:Red<br>O:Orange Y:Yellow BL:Blue W:White |

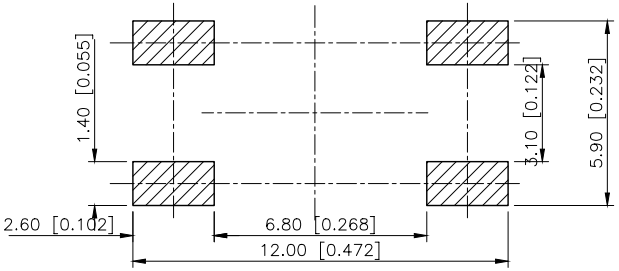


P.C.B MOUNTING HOLES

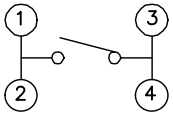


Circuit Diagram

| ITEM | PAPT NAMF | QTY | MATERIAL | FINISHING |
|---|---|---|---|---|
| ⑤ | Terminal | 4 | Brass（0.30t） | Plating silvering |
| ④ | Contact | 1 | F.ag/SUS | Natural |
| ③ | Base | 1 | PA46 | |
| ② | Cover | 1 | Spcc | Plating Nickel |
| ① | Keystake | 1 | PA46 | |

| AuGLAR | ±5° |
|---|---|
| X. | ±0.40 |
| X.x | ±0.30 |
| X.xx | ±0.20 |
| X.xxx | ±0.15 |
| UNSPECIFIED TOLERAuCES | |

XKB Connection

| DESIGN | 阿树 | VIEW: | MODEL TYPE: TACT SWITCH |
|---|---|---|---|
| CHECKED | | UNIT: mm/in | PART NO.: TS-1102SD-C-H-B |
| APPROVED | | SIZE: A4 | DWG NO.: TS-1102SD-C-H-B |

XKB INDUSTRIAL PRECISION CO.,LIMITED

| SCALE | PAGE | REVISION |
|---|---|---|
| N/A | 1/1 | A1 |