REVISIONS					
REV.	ECN NO.	LOCATION	DESCRIPTION	DATE	DESIGN
A0	N/A		INITIAL RELEASE	/	/
A1	N/A		图面升级整理图面	2025.2.28	阿树

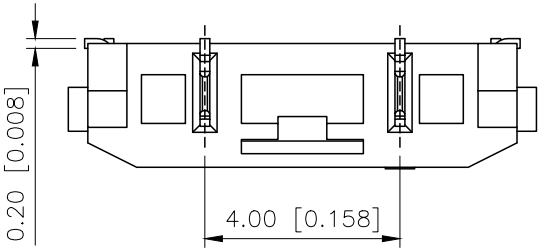

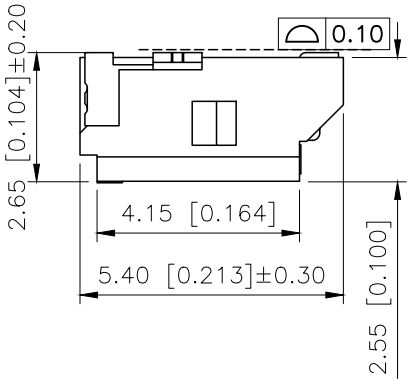

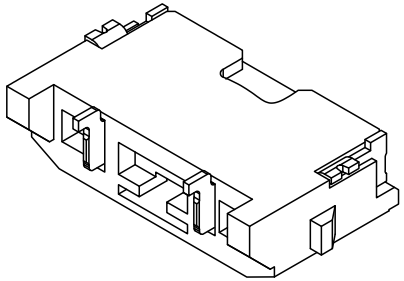

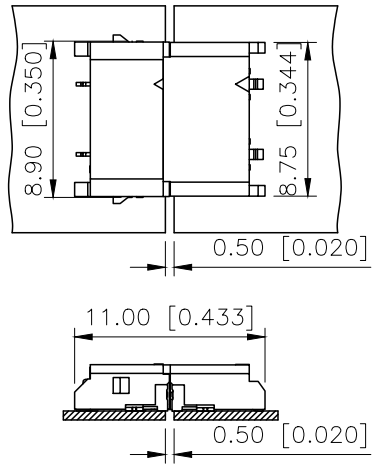

Connector Chimerism(Reference)

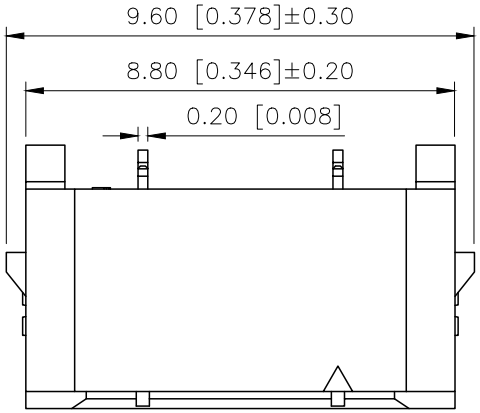

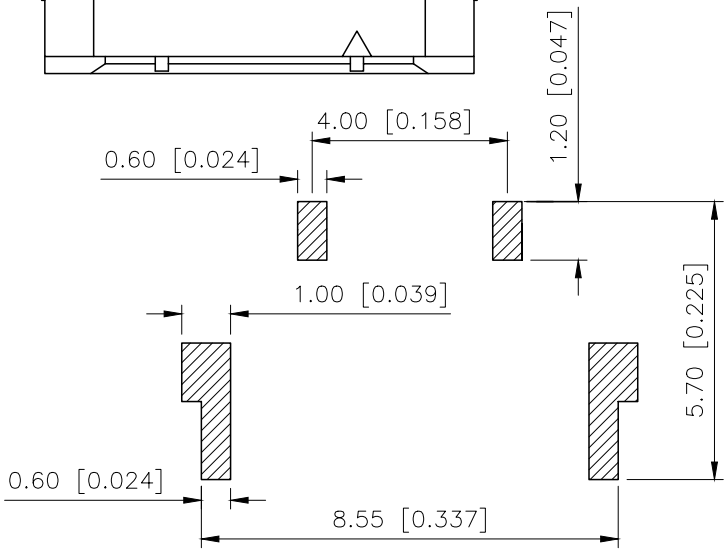

PCB LAYOUT

Specifications:
规格：
Voltage rating:300V AC/DC
额定电压：300V AC/DC
Current rating:3A AC/DC
额定电流：3A AC/DC
Withstanding voltage:1700V AC/minute
耐受电压：1700V AC/分钟
Temperature range:−40℃−+105℃
温度范围：−40℃−+105℃
Insulation resistance:1000MΩ min
绝缘电阻：1000MΩ Min
Contact resistance:20mΩ Max
接触电阻：20mΩ Max

PART NO.:

X4001 W F−02−LP SN
① ② ③ ④ ⑤ ⑥

①Series Number.
②Category:W−Wafer
③Welding Board Angle:F−Female
④Row No.−Pin No.:02 PIN
⑤Material:LP−LCP 94V−0
⑥Plating Category:SN−Tin Plating

X4001WF−02−LPSN	LCP	Phosphor Bronze	X4001WM
PART NO	Material	Material	Suitable XKB Wafer

AuGLAR	±5°
X.	±0.40
X.x	±0.30
X.xx	±0.20
X.xxx	±0.15
UNSPECIFIED TOLERAuCES	

XKB Connection 星创

DESIGN	阿树	VIEW:	MODEL TYPE: 4.0mm BTB Connector
CHECKED		UNIT: mm/in	PART NO.: X4001WF−02−LPSN
APPROVED		SIZE: A4	DWG NO.:

XKB INDUSTRIAL PRECISION CO.,LIMITED

SCALE	PAGE	REVISION
N/A	1/1	A1