REVISIONS					
REV.	ECN NO.	LOCATION	DESCRIPTION	DATE	DESIGN
A1	N/A		INITIAL RELEASE	2024.7.13	阿树
A2	N/A		更新图框	2024.12.27	阿树

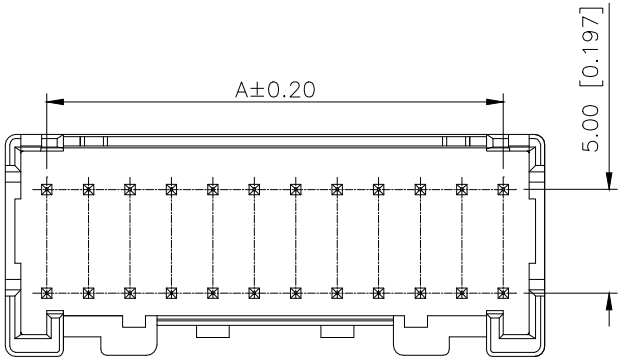

■SPECIFICATIONS
- Voltage rating:250V AC,DC
- Current rating:3A,AC,DC
- Withstanding Voltage:800V AC/minute
- Insulation resistance:1000MΩ min
- Temperature range:−45°C+95°C
- Contact resistance:20mΩ max

PART NO.:

K 202820 W V−2x13 S−N0 SN
① ② ③ ④ ⑤ ⑥ ⑦ ⑧

①K:XKBTEK−Car Connector
②XKB Series No
③Category:W−Wafer
④Welding Board Rangle:V−Stright 180°
⑤Row No.−Pin No:2xXX−2x04P~2x21P
⑥S−With registrarion mast;
blank−without registration
⑦Material:NO−PA66 UL 94V−0
⑧Plating Gategory: SN−Tin−Plated

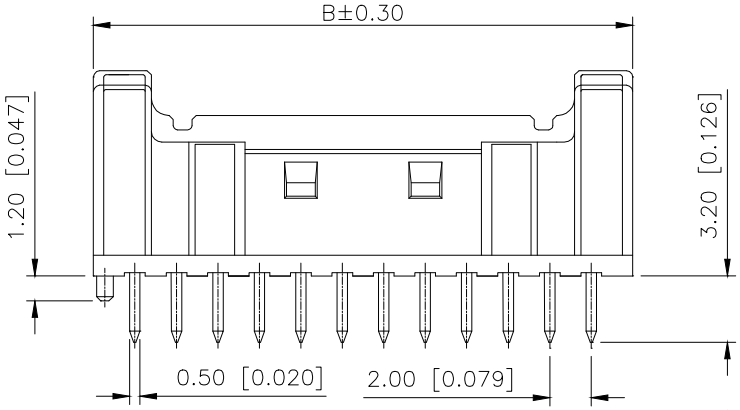

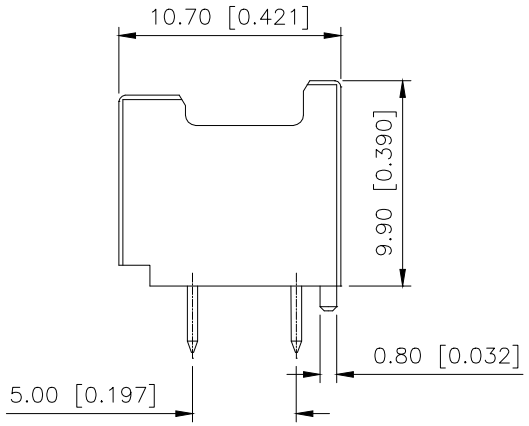

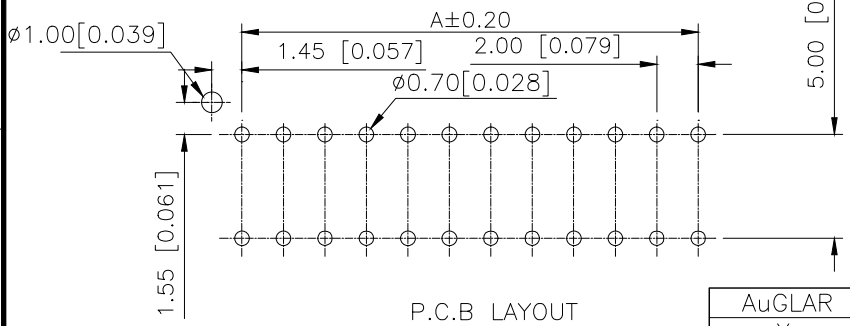

P.C.B LAYOUT

Poles	Dimension mn	
	A	B
2x04	6.00	10.00
2x05	8.00	12.00
2x06	10.00	14.00
2x07	12.00	16.00
2x08	14.00	18.00
2x09	16.00	20.00
2x10	18.00	22.00
2x11	20.00	24.00
2x12	22.00	26.00
2x13	24.00	28.00
2x14	26.00	30.00
2x15	28.00	32.00
2x16	30.00	34.00
2x17	32.00	36.00
2x18	34.00	38.00
2x19	36.00	40.00
2x20	38.00	42.00
2x21	40.00	44.00

PART NO	Material	Material (pin)	Flinish(pin)	Suitable XKB Housing
K202820WV−2x13S−N0SN	PA66	Brass	Tin−Plated	K202820H

AuGLAR	±5°
X.	±0.40
X.x	±0.30
X.xx	±0.20
X.xxx	±0.15
UNSPECIFIED TOLERAuCES	

XKB Connection

DESIGN	阿树	VIEW:
CHECKED		UNIT: mm/in
APPROVED		SIZE: A4

MODEL TYPE: 2.0mm Automobile Connector
PART NO.: K202820WV−2x13S−N0SN
DWG NO.: X−K202820WV−2x13S−N0SN

SCALE	PAGE	REVISION
N/A	1/1	A2

XKB INDUSTRIAL PRECISION CO.,LIMITED