REVISIONS					
REV.	ECN NO.	LOCATION	DESCRIPTION	DATE	DESIGN
A0	N/A		INITIAL RELEASE	/	/
A1	N/A		图面升级整理图面	2025.09.27	阿树

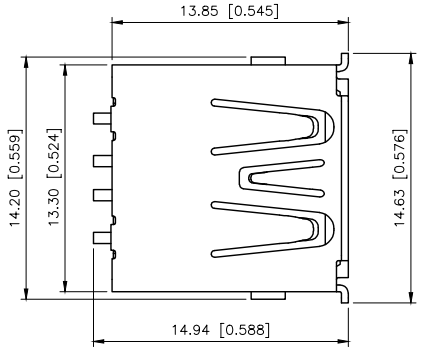

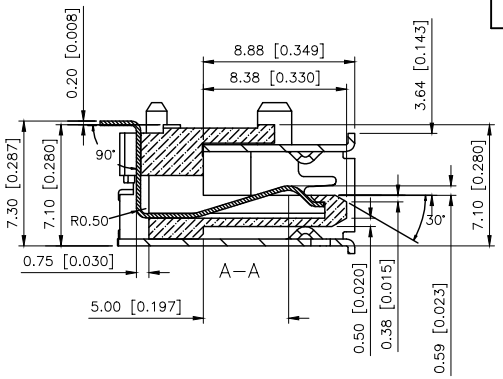

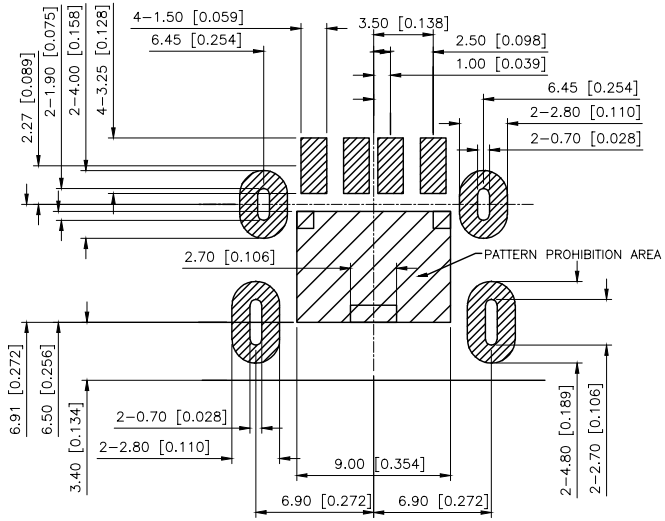

RECOMMENDED PCB LAYOUT
(THICKNESS=1.2mm,TOLERANCE:±0.05)

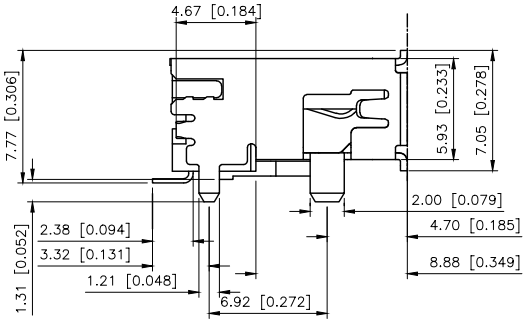

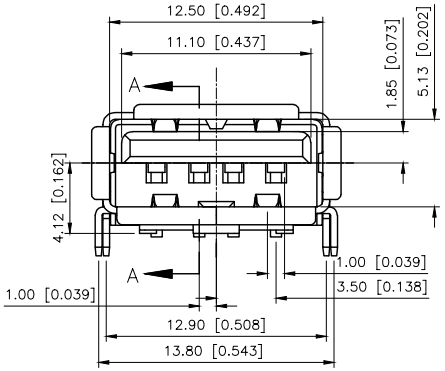

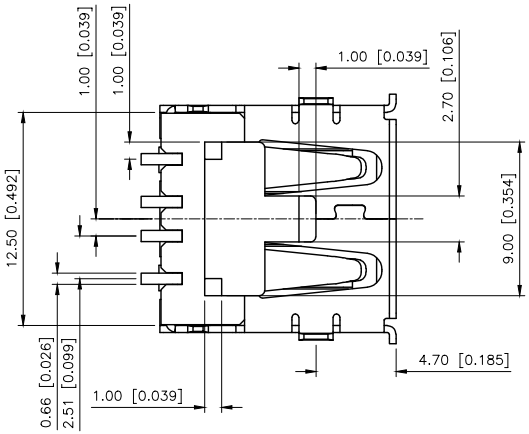

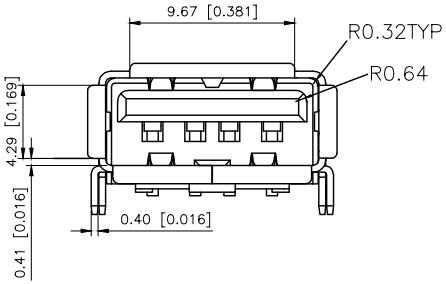

说明 Notes:

1ELECTRICAL 电气:
- Current Rating 额定电流:1.5Amp
- Contact resistance 接触电阻:30m Ohm Max
- Insulator resistance 绝缘电阻:1000 MEGA ohms MIN
- Withstanding Voltage 耐电压:500V AC/Minute

2. Material 材质:
- Plastic 胶芯:LCP, UL94V-0 BLACK
- Terminal 端子:黄铜 (C2680)/磷铜 (C5191)
- Shell 外壳:不锈钢(SUS304)

3.electroplate 电镀:
- Terminal 端子:电镀:接触区镀镍底50u"Min,后镀钯镍30u"Min.及镀金Min,
  其它区镍底50u"Min.镀锡152u"fin
- Shell 外壳:镀镍底40u"Min后镀雾锡120Min

4.Integral insertion force 整体插入力:<35N, 拔出力>10N

5. Glue core and iron shell retention 胶芯与铁壳保持力>120N

6. Terminal and glue core retention force 端子与胶芯保持力>7.8N Min

7.Temperature Range 温度范围:-40°~+85°C

U221-043N-4BVS15-S1S

- 1:Au 1U"
- 6:Au 30U"
- 1:PBT
- 2:PA6T
- 3:PA9T
- 4:LCP
- W:WHITE
- B:BLACK
- S:Scrolls
- F:Flat
- 1:BRASS(C2680)
- 2:Phosphorous bronze(C5191)
- S:SUS

AuGLAR	±5°
X.	±0.40
X.x	±0.30
X.xx	±0.20
X.xxx	±0.15
UNSPECIFIED TOLERAuCES	

XKB Connection

DESIGN	阿树	VIEW:	MODEL TYPE: USB 2.0
CHECKED		UNIT: mm/in	PART NO.: U221-043N-4BVS15-S1S
APPROVED		SIZE: A4	DWG NO.: X-U221-043N-4BVS15-S1S

XKB INDUSTRIAL PRECISION CO.,LIMITED

SCALE	PAGE	REVISION
N/A	1/1	A1