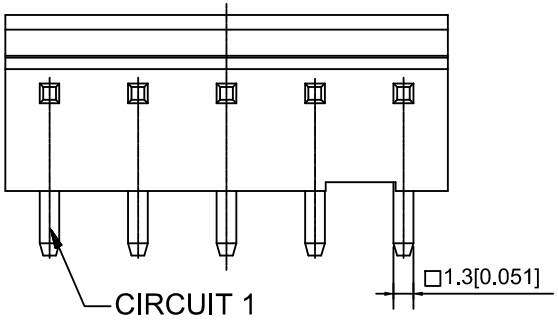


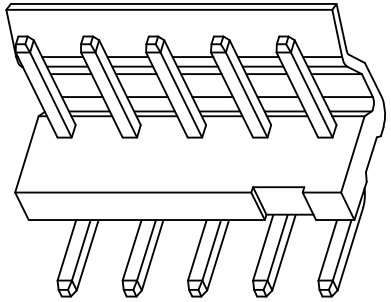

3D图示（参考）

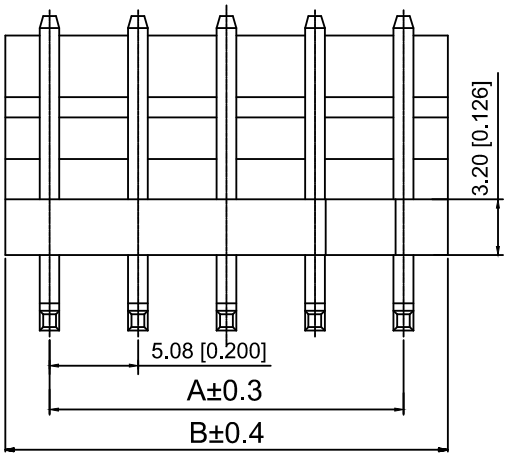


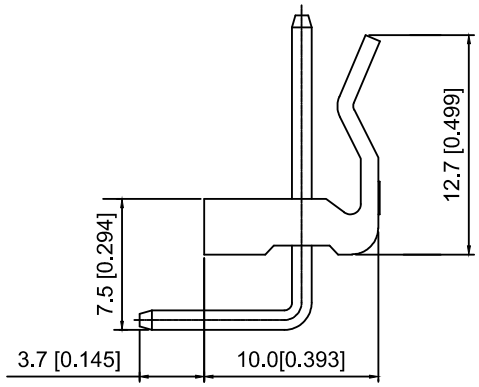


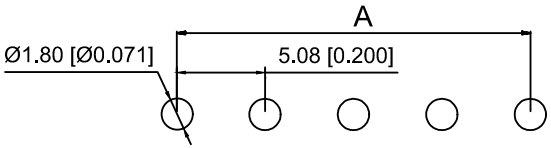


PCB安装尺寸图

## ■ Specifications：

1. Voltage rating: 250V AC / DC
2. Current rating: 5A AC / DC
3. Withstanding voltage: 1500V AC/minute
4. Temperature range: -25°C~+85°C
5. Insulation resistance: ≥1000M Ω
6. Contact resistance: 0.02Ω Max
7. Material: Nylon 66
   Contact Pin：Brass

X5080 W R -05 A- N0 SN
① ② ③ ④ ⑤ ⑥ ⑦

① Series No.
② Category：W-WAFER
③ Wedding Board Angle ：R-Stright 90°
④ Row No.Pin No.XX-02-12
⑤ Special No.A-There are graps
⑥ Material:N0-Nylon66 94V-0
⑦ Planting Category:SN-Bright tin plating

| PIN | A | B |
|---|---|---|
| 2 | 5.08 | 10.16 |
| 3 | 10.16 | 15.24 |
| 4 | 15.24 | 20.32 |
| 5 | 20.32 | 25.40 |
| 6 | 25.40 | 30.48 |
| 7 | 30.48 | 35.56 |
| 8 | 35.56 | 40.64 |
| 9 | 40.64 | 45.72 |
| 10 | 45.72 | 50.80 |
| 11 | 50.80 | 55.88 |
| 12 | 55.88 | 60.96 |

| X5080WR-05A-NOSN | Nylion66 UL 94V-0 | Brass | Tin-Plated | X5080H |
|---|---|---|---|---|
| PART N0 | Material | Material(Pin) | Finsh(Pin) | Suitable XKB Housing |

| | | | | | | |
|---|---|---|---|---|---|---|
| | | | | | ANGLAR | ±5° |
| ΔX | | | | | L≤ 4 | ±0.2 |
| ΔX | | | | | 4<L≤ 16 | ±0.3 |
| ΔX | | | | | 16<L≤ 63 | ±0.4 |
| MARK | DESCRIPTION | DATE | REVISED | APPROVED | L> 63 | ±0.5 |
| REVISIONS | | | | | UNSPECIFIED TOLERANCES | |

www.helloxkb.com www.helloxkb.cn www.xk-dg.cn

| | | | |
|---|---|---|---|
| DSND | | SCALE: N/A | MODEL TYPE: 5.08mm Crimp Style Connectors |
| DWN | | VIEW: | PART NO.: X5080WR-05A-N0SN |
| CHKD | | UNIT: mm/in | DWG NO.: X-X5080WR-05A-N0SN |
| APPD | | SIZE: A4 | |

XKB INDUSTRIAL PRECISION CO.,LIMITED

| WEIGHT | SHEET | REVISION |
|---|---|---|
| | 1/1 | A0 |