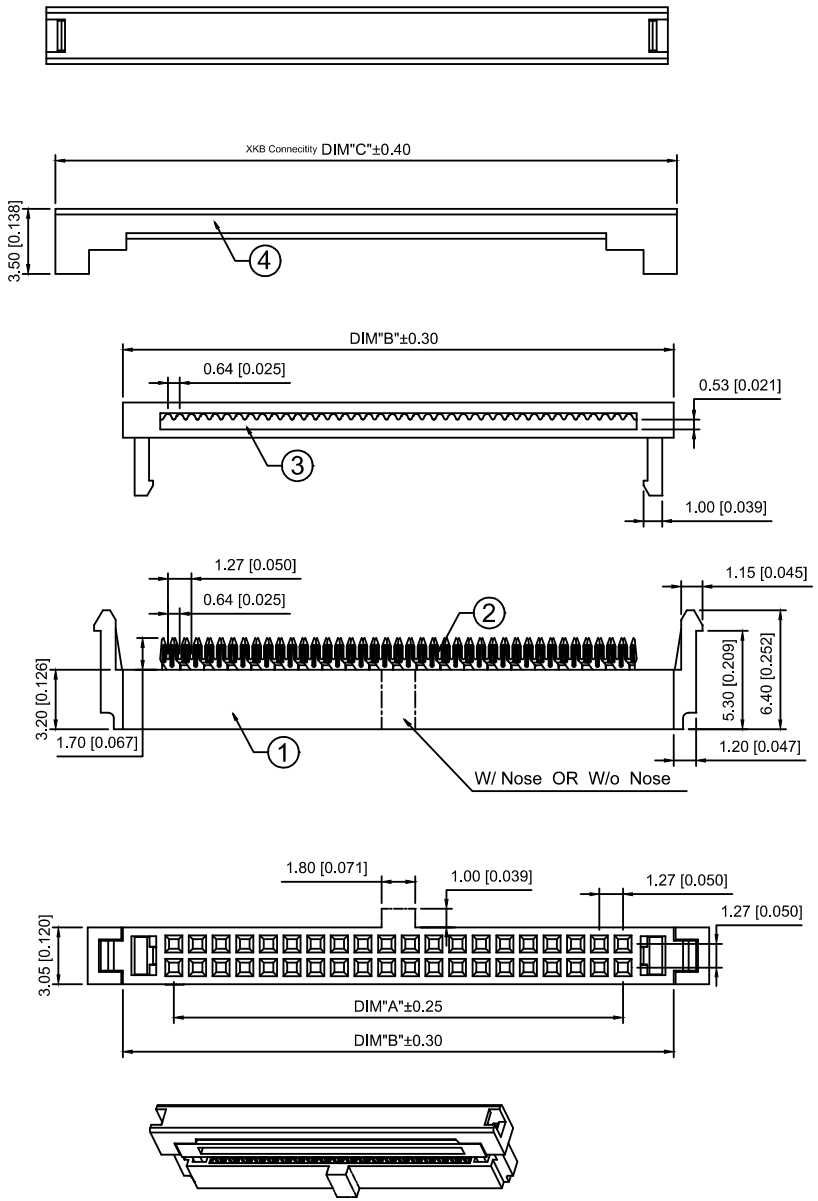

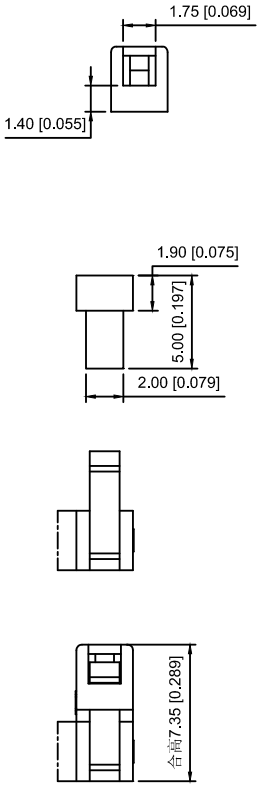

Specifications:
规格：
Voltage rating:250V AC/DC
额定电压：250V AC/DC
Current rating:1A AC/DC
额定电流：1A AC/DC
Withstanding voltage:500V AC/minute
耐受电压：500V AC/分钟
Temperature range:-40℃-+105℃
温度范围：-40℃-+105℃
Insulation resistance:≥100MΩ
绝缘电阻：≥100MΩ
Contact resistance:≤20mΩ
接触电阻：≤20mΩ

X1270 H 2 -2x12 -PT V01
① ②③ ④ ⑤ ⑥

1.Series No
2.Category:H-HSG
3.2:With hook
4.Row No-Pin No:2xXX-2x03P~2x40P
5.Material:PT:PBT UL94V-0
6.Plating Category: V01-All Gold Flash

XKB Connecitity

NUMBER OF POSITIONS	DIMENSION		
	A	B	C
2x03	2.54	8.00	11.80
2x04	3.81	9.27	13.07
2x05	5.08	10.54	14.34
2x06	6.35	11.81	15.61
2x07	7.62	13.08	16.88
2x08	8.89	14.35	18.15
2x10	11.43	16.89	20.69
2x12	13.97	19.43	23.23
2x13	15.24	20.70	24.50
2x15	17.78	23.24	27.04
2x16	19.05	24.51	28.31
2x17	20.32	25.78	29.58

NUMBER OF POSITIONS	DIMENSION		
	A	B	C
2x18	21.59	27.05	30.85
2x20	24.13	29.59	33.39
2x22	26.67	32.13	35.93
2x25	30.48	35.94	39.74
2x30	36.83	42.29	46.09
2x32	39.37	44.83	48.63
2x33	40.64	46.10	49.90
2x34	41.91	47.37	51.17
2x35	43.18	48.64	52.44
2x37	45.72	51.18	54.98
2x38	46.99	52.45	56.25
2x40	49.53	54.99	58.79

X1270H2-2x12-PTV01	PBT UL 94V-0	Phosphor Bronze	Gold Flash	X1270WV-2x12B1 X1270WVS-2x12B1	XPD0.635-A30PXX-IDC	X1270HI-2x12
PART NO	Material	Material(Pin And Solder Tabs)	Finish(Pin And Solder Tabs)	Suitible XKB Wafer	Suitible XKB flat cable	Suitible XKB DIP

MARK	DESCRIPTION	DATE	REVISED	APPROVED
ΔX				
ΔX				
ΔX				

REVISIONS

ANGLAR	±5°
L≤ 4	±0.2
4<L≤ 16	±0.3
16<L≤ 63	±0.4
L> 63	±0.5

UNSPECIFIED TOLERANCES

www.helloxkb.com www.helloxkb.cn www.xk-dg.cn

XKB INDUSTRIAL PRECISION CO.,LIMITED

DSND		SCALE: N/A	MODEL TYPE: 1.27mm IDC Connectors
DWN		VIEW:	PART NO.: X1270H2-2x12-PTV01
CHKD		UNIT: mm/in	DWG NO.: X-X1270H2-2x12-PTV01
APPD		SIZE: A4	WEIGHT / SHEET 1/1 / REVISION A0