REVISIONS					
REV.	ECN NO.	LOCATION	DESCRIPTION	DATE	DESIGN
A0	N/A		INITIAL RELEASE	/	/
A1	N/A	A1 X2	尺寸变更，新增不同颜色卡位图面，图面升级整理图面	2025.1.9	阿树

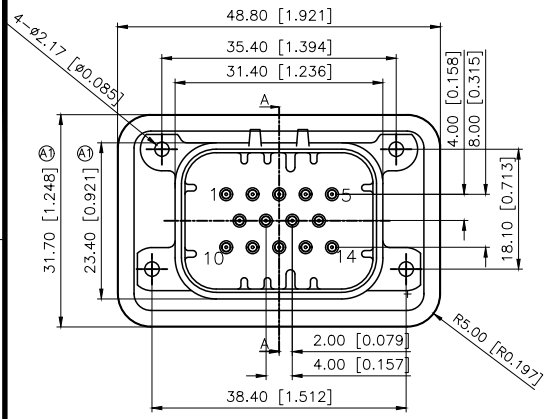

K776280WR-14-PTXXB

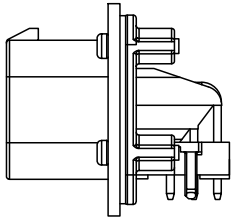

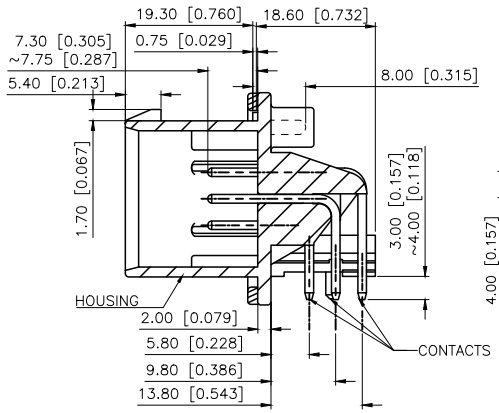

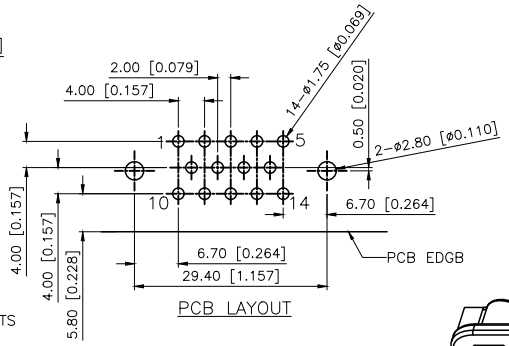

PCB LAYOUT

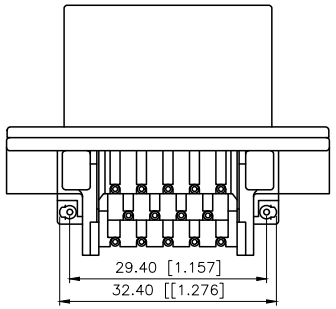

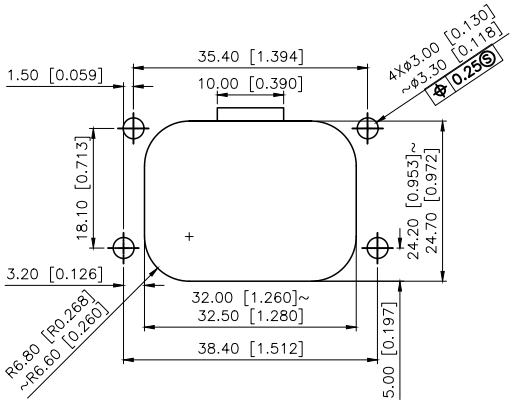

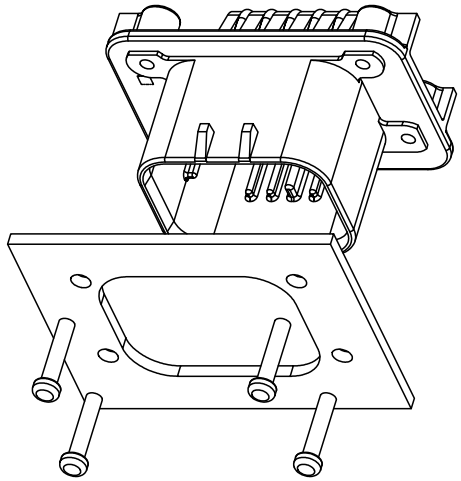

Current rating:7A AC/DC
额定电流：7A AC/DC
Temperature range:-40℃-+85℃
温度范围：-40℃-+85℃

PART NO.:

K 776280 W R-14-PT SN W
① ② ③ ④ ⑤ ⑥ ⑦ ⑧

①K:XKBTEK-Car Connector
②XKB Series No
③Category:W-Wafer
④Welding Board Rangle:R-Stright 90°
⑤Row No.Pin No:14 Pin
⑥Material:PT-PBT
⑦Palting:V01-Gold Flash ;SN-Plated Tin
⑧Color:X:B-Black; W-White;
GY-Gray; BL-Blue

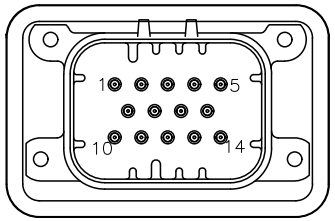

K776280WR-14-PTXXW

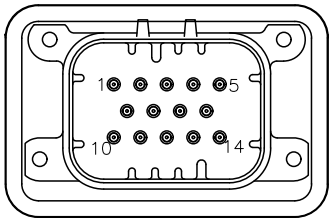

K776280WR-14-PTXXGY

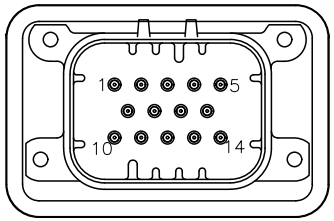

K776280WR-14-PTXXBL

PLAYTING	COLOR	NAME
Gold Flash	Blue	K776280WR-14-PTV01BL
Gold Flash	Gray	K776280WR-14-PTV01GY
Gold Flash	White	K776280WR-14-PTV01W
Gold Flash	Black	K776280WR-14-PTV01B
Plated Tin	Blue	K776280WR-14-PTSNBL
Plated Tin	Gray	K776280WR-14-PTSNGY
Plated Tin	White	K776280WR-14-PTSNW
Plated Tin	Black	K776280WR-14-PTSNB

K776280WR-14-PTSNW	PBT	Brass	K776280H
PART NO	Material	Material(Pin)	Suitable XKB Housing

AuGLAR	±5°
X.	±0.40
X.x	±0.30
X.xx	±0.20
X.xxx	±0.15
UNSPECIFIED TOLERAuCES	

XKB Connection 星河

DESIGN	阿树	VIEW:	MODEL TYPE: 4.0mm Automobile connector
CHECKED		UNIT: mm/in	PART NO.: K776280WR-14-PTSNW
APPROVED		SIZE: A4	DWG NO.: X-K776280WR-14-PTSNW

XKB INDUSTRIAL PRECISION CO.,LIMITED

SCALE	PAGE	REVISION
N/A	1/1	A1