REVISIONS					
REV.	ECN NO.	LOCATION	DESCRIPTION	DATE	DESIGN
A1	N/A		尺寸变更	2024.8.20	阿树
A2	N/A		独立各PIN数图纸，增加开孔定位尺寸	2024.12.7	阿树

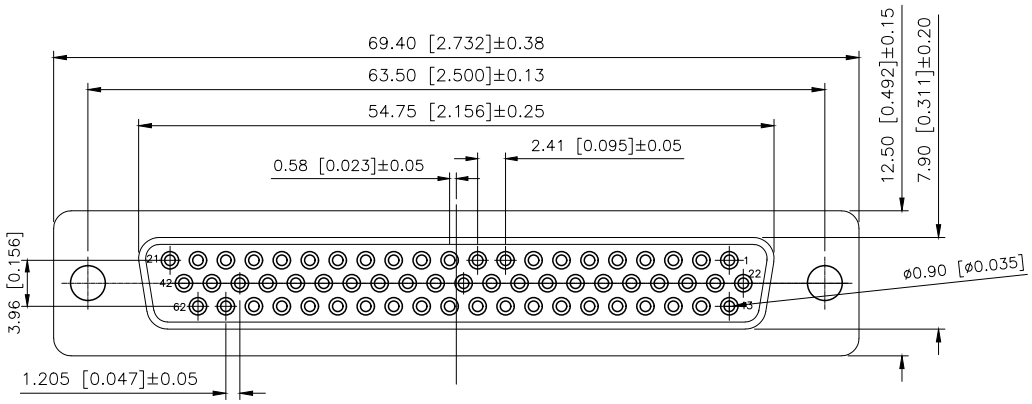

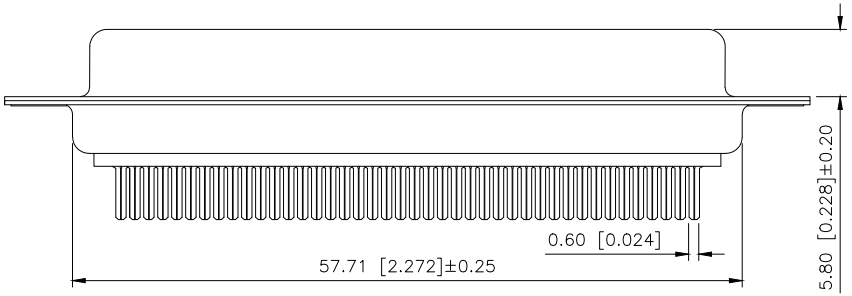

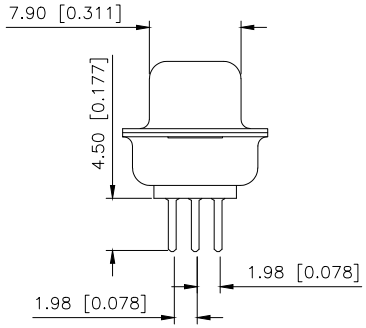

PART NO.:

X05 62 F T 7 W 2
① ② ③ ④ ⑤ ⑥ ⑦

① Series No.
② Pin No.:62PIN;
③ Welding Board Angle :F—Female
④ T：Tradutional C：Car—pin
⑤ Planting Categotry:
1:1U 2:2U 3:3U 4:5U 5:15U 6:30U 7:AuSn
⑥ Color:B—BLACK W—White BL—Blue
⑦ 1:TYPE—1; 2:TYPE—2; 5:TYPE—5; 7:TYPE—7

Specifications:
规格：
1.Voltage rating:250VAC/DC
额定电压：250V AC/DC
2.Current rating:3A(T) / 5A(C) AC/DC
额定电流：3A(冲针) / 5A(车针) AC/DC
3.Withstanding voltage:500V AC/minute
耐受电压：≥500V AC/分钟
4.Temperature range: —55℃—+105℃
温度范围：—55℃—+105℃
5.Insulation resistance:1000MΩMIN
绝缘电阻：≥1000MΩ
6.Contact resistance:30mΩMax
接触电阻：≥30mΩ
Materiai:
材料：
7.Rubber core:PBT UL94V—0
胶芯：PBT UL94V—0
8.Terminal:Copper alloys
端子：铜合金。
9.The iron shell:SPCC Nivkel Plating/
Tin Plating/Gold Plating
铁壳：SPCC,镀镍/镀锡/镀金
B、成品不能有弯针，R角不一致等不良。

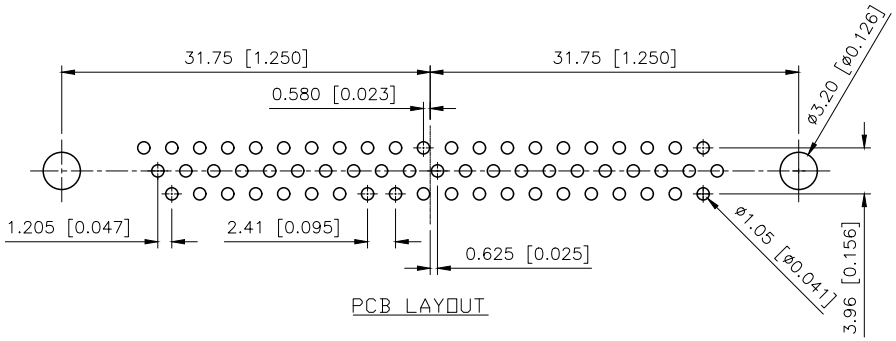

PCB LAYOUT

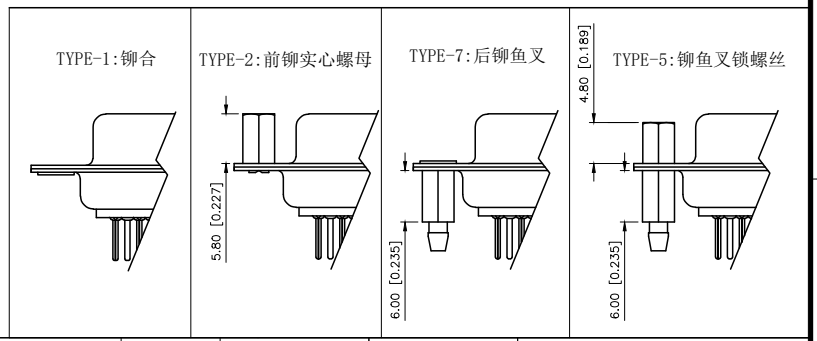

AuGLAR	±5°
X.	±0.40
X.x	±0.30
X.xx	±0.20
X.xxx	±0.15
UNSPECIFIED TOLERAuCES	

XKB Connection 星创

DESIGN	阿树	VIEW:	MODEL TYPE: D-SUB
CHECKED		UNIT: mm/in	PART NO.: X0562FT7W2
APPROVED		SIZE: A4	DWG NO.:

XKB INDUSTRIAL PRECISION CO.,LIMITED

SCALE	PAGE	REVISION
N/A	1/1	A2

www.helloxkb.com www.helloxkb.cn www.xk—dg.cn