REVISIONS					
REV.	ECN NO.	LOCATION	DESCRIPTION	DATE	DESIGN
A0	N/A		INITIAL RELEASE	2024.03.27	

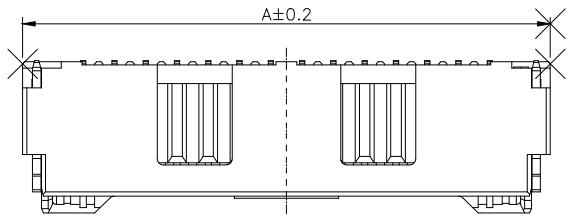

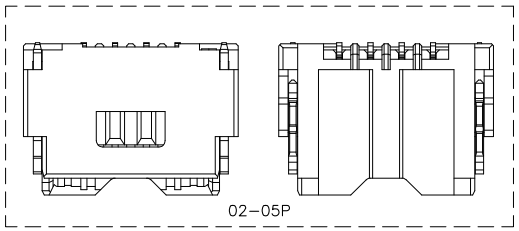

规格 Specifications:
额定电压 Voltage rating:100VAC/DC。
额定电流 Current rating:2A AC/DC
耐电压 Withstanding voltage:500V AC/minute
温度区间 Temperature range:-40℃to+85℃
绝缘电阻 Insulation resistance:≥500MΩ Min
接触电阻 Contact resistance:≤20mΩ Max

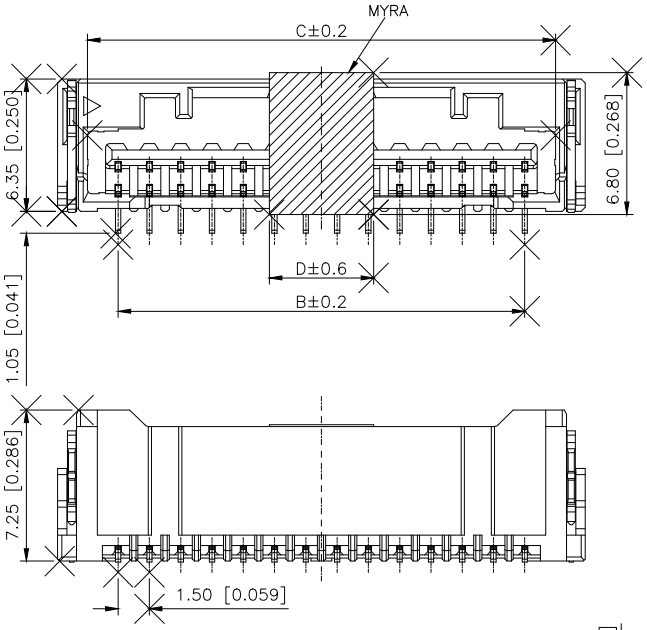

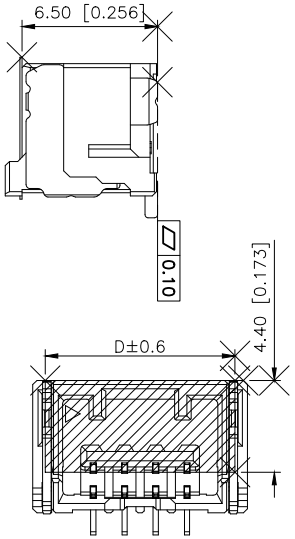

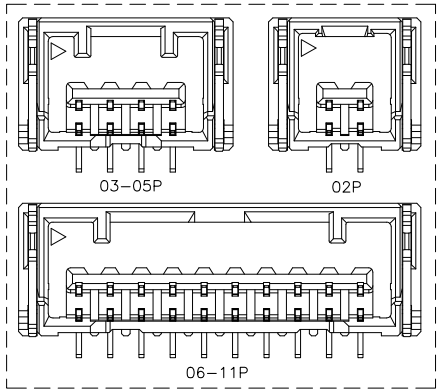

PART NO.:

X1515 W V S-06-LP SW
① ② ③ ④ ⑤ ⑥ ⑦

① Series No
② Category:W-Wafer
③ Welding Board Angle:V-Staight Angle 180°
④ Welding Way:S-SMT
⑤ Row No -Pin No:XX-02P-15P
⑥ Material:LP-LCP 94V-0
⑦ Planting Category:SW-Matte Tin plating

Poles	Dimensions(mm)				Poles	Dimensions(mm)			
	A	B	C	D		A	B	C	D
02	7.30	1.50	4.45	6.10	09	17.80	12.00	14.95	5.00
03	8.80	3.00	5.95	7.60	10	19.30	13.50	16.45	5.00
04	10.30	4.50	7.45	9.10	11	20.80	15.00	17.95	5.00
05	11.80	6.00	8.95	10.60	12	22.30	16.50	19.45	5.00
06	13.30	7.50	10.45	12.10	13	23.80	18.00	20.95	5.00
07	14.80	9.00	11.95	13.60	14	25.80	19.50	22.45	5.00
08	16.30	10.50	13.45	5.00	15	26.80	21.00	23.95	5.00

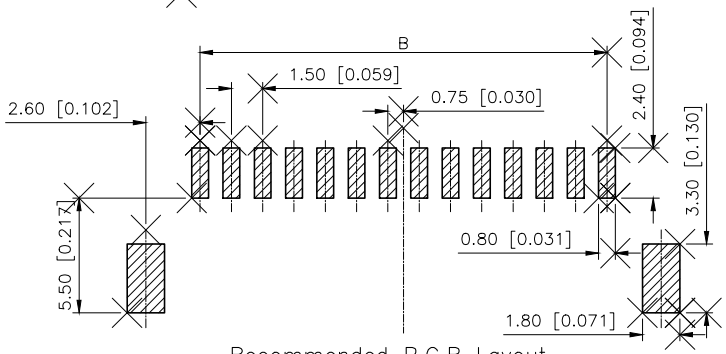

Recommended P.C.B Layout
General Tolerance±0.05

X1515WVS-06-LPSW	LCP UL 94V-0	Phosphor Bronze	Brass	Matte Tin-Plated	X1515T
PART NO	Material	Material(pin)	Material	Finish(pin)	Suitable XKB Terminal

ANGLAR	±5°
X.	±0.40
X.x	±0.30
X.xx	±0.20
X.xxx	±0.15
UNSPECIFIED TOLERANCES	

XKB INDUSTRIAL PRECISION CO.,LIMITED

DESIGN	桑 甚	VIEW:	MODEL TYPE: 1.50mm Crimp Style Connector
CHECKED		UNIT: mm/in	PART NO.: X1515WVS-06-LPSW
APPROVED		SIZE: A4	DWG NO.: X-X1515WVS-06-LPSW
			SCALE N/A / PAGE 1/1 / REVISION A0