REVISIONS					
REV.	ECN NO.	LOCATION	DESCRIPTION	DATE	DESIGN
A0	N/A		INITIAL RELEASE	/	/
A1	N/A		图面升级整理图面	2025.06.27	阿树

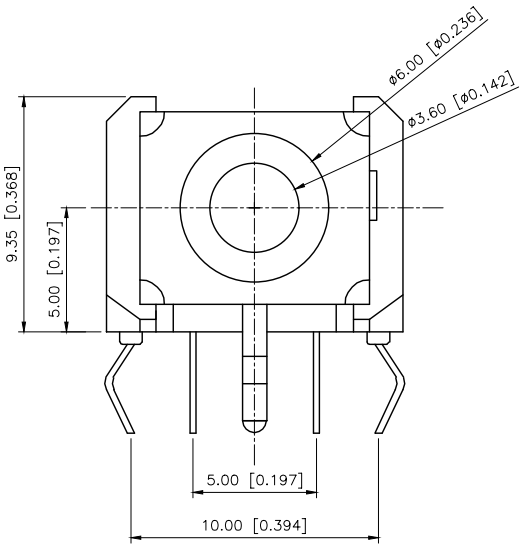

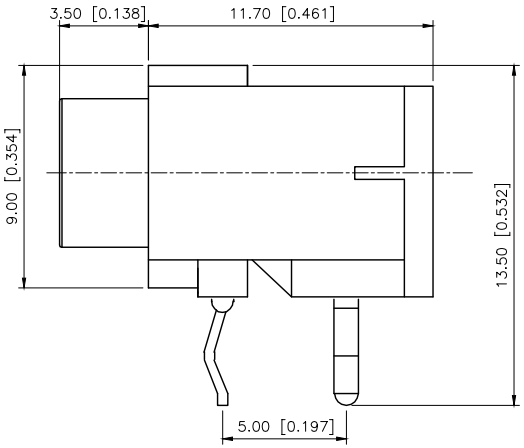

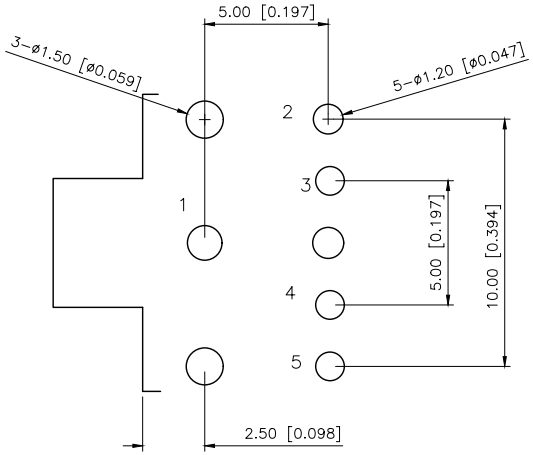

PCB LAYOUT
TOP VIEW

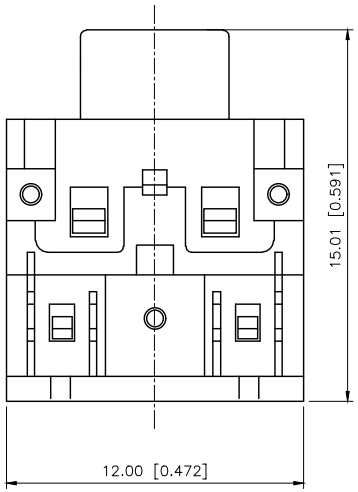

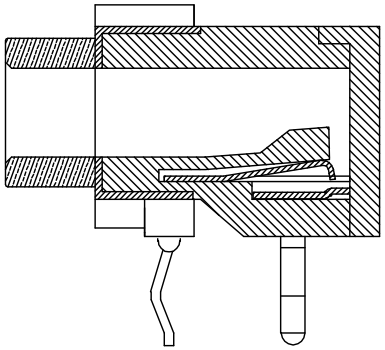

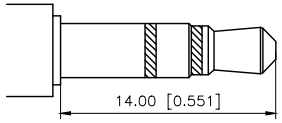

ø3.5 MATING PLUG

Model No.	PJ-3062-HD-X
Schematic	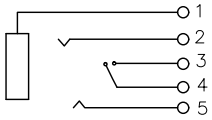
Color	B:Black R:Red G:Green CO:Copper Set

Plastic	PBT	
Terminal 5	Phosphor Bronze	TIN
Terminal 4	Phosphor Bronze	TIN
Terminal 3	Phosphor Bronze	TIN
Terminal 2	Phosphor Bronze	TIN
Terminal 1	Phosphor Bronze	TIN
PAPT NAMF	MATERIAL	PLATING

AuGLAR	±5°
X.	±0.40
X.x	±0.30
X.xx	±0.20
X.xxx	±0.15
UNSPECIFIED TOLERAuCES	

XKB Connection 星创

DESIGN	阿树	VIEW:	MODEL TYPE: 3.5 PHONE JACK
CHECKED		UNIT: mm/in	PART NO.: PJ-3062-HD-B
APPROVED		SIZE: A4	DWG NO.: X-PJ-3062-HD-B

XKB INDUSTRIAL PRECISION CO.,LIMITED

SCALE	PAGE	REVISION
N/A	1/1	A1