REVISIONS					
REV.	ECN NO.	LOCATION	DESCRIPTION	DATE	DESIGN
A1	N/A		pin数表更新，图片面升级整理图面	2024.08.06	阿 树

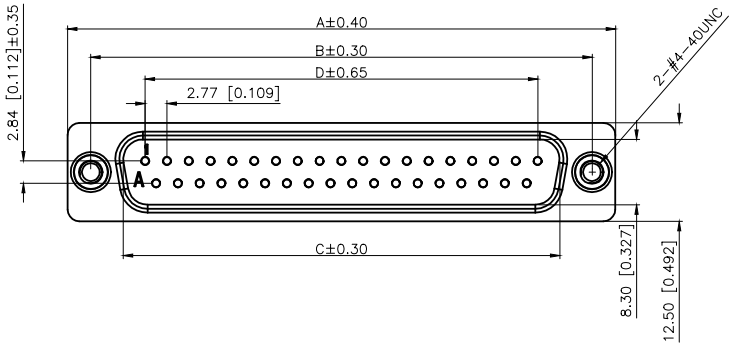

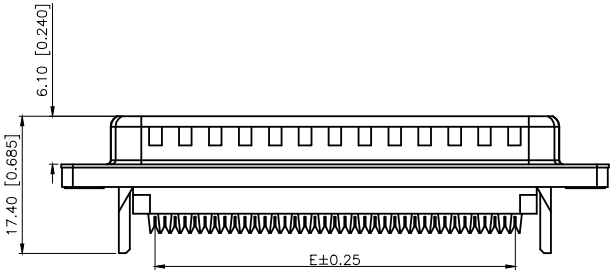

Specifications:
规格:
1.Voltage rating:250VAC/DC
额定电压：250V AC/DC
2.Current rating:1A AC/DC
额定电流：1A AC/DC
3.Withstanding voltage:500V AC/minute
耐受电压：≥500V AC/分钟
4.Temperature range:−40℃−+105℃
温度范围：−40℃−+105℃
5.Insulation resistance:1000MΩMIN
绝缘电阻：≥1000MΩ
6.Contact resistance:20mΩMax
接触电阻：≥20mΩ
7.Rubber core:PBT UL94V−0
胶芯：PBT UL94V−0
8.The iron shell:SPCC Nivkel Plating/Tin Plating
铁壳：SPCC,镀镍/镀锡
B、成品不能有弯针，R角不一致等不良。

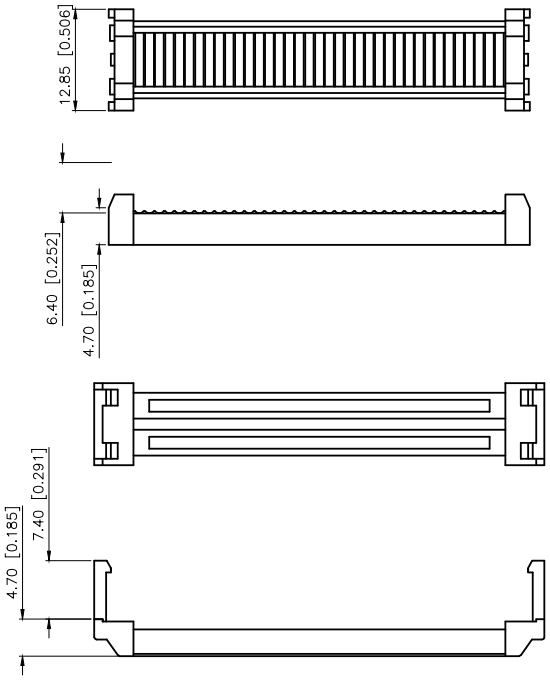

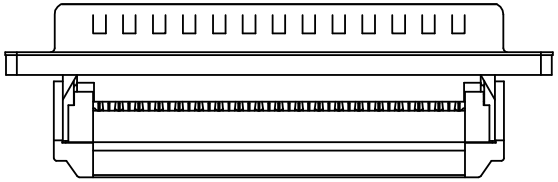

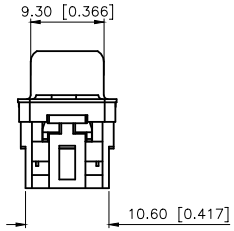

PART NO.:
X08 15 W T 7 B 5
① ② ③ ④ ⑤ ⑥ ⑦

① Series NO.
② Row No.Pin No.XX−09;15;25;37
③ Welding Board Angle :W−Male
④ T：Tradutional C：Car−pin
⑤ Planting Categotry: 1:1U；2:2U；3:3U；4:4U；5:5U；6:6U 7:AuSn
⑥ Color:B−BLACK;W−White;BL−Blue
⑦ 5:TYPE−5

NUMBER OF POSITIONS	DIMENSION				
	A±0.40	B±0.30	C±0.30	D±0.65	E±0.25
9	30.80	25.00	16.95	11.08	10.16
15	39.14	33.30	25.30	19.39	17.78
25	53.05	47.04	38.96	33.24	30.38
37	69.32	63.50	55.42	49.86	45.72

X08XXWXXX1	XDBLS	XDBLM
PART NO	SCREW	NUT

ANGLAR	±5°
X.	±0.40
X.x	±0.30
X.xx	±0.20
X.xxx	±0.15
UNSPECIFIED TOLERANCES	

XKB

DESIGN	阿 树	VIEW:	MODEL TYPE: D−USB
CHECKED		UNIT: mm/in	PART NO.: X0815WT7B5
APPROVED		SIZE: A4	DWG NO.: X−X0815WT7B5

XKB INDUSTRIAL PRECISION CO.,LIMITED

SCALE	PAGE	REVISION
N/A	1/1	A1

www.helloxkb.com www.helloxkb.cn www.xk−dg.cn