REVISIONS					
REV.	ECN NO.	LOCATION	DESCRIPTION	DATE	DESIGN
A0	N/A		INITIAL RELEASE	/	/
A1	N/A		图面升级整理图面	2025.2.14	阿树

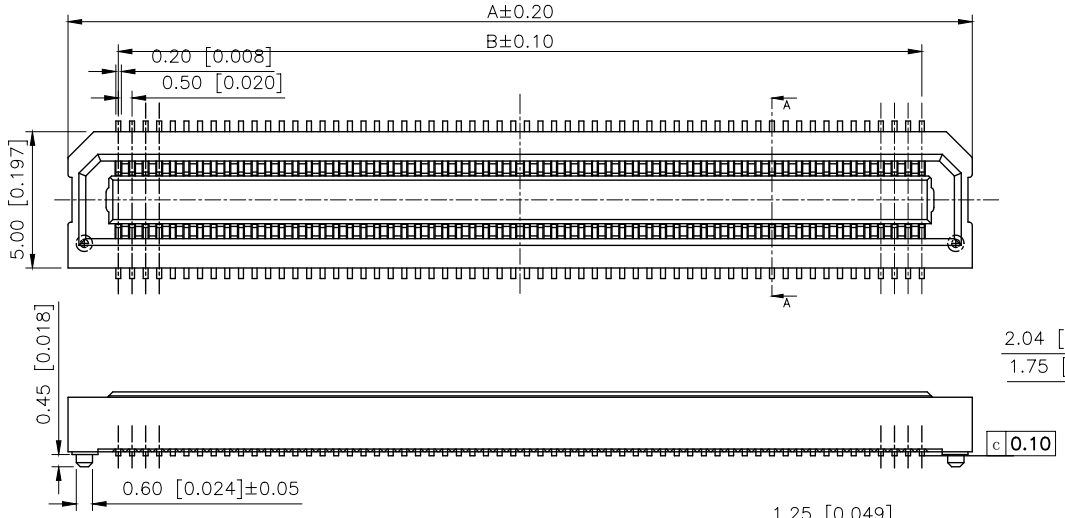

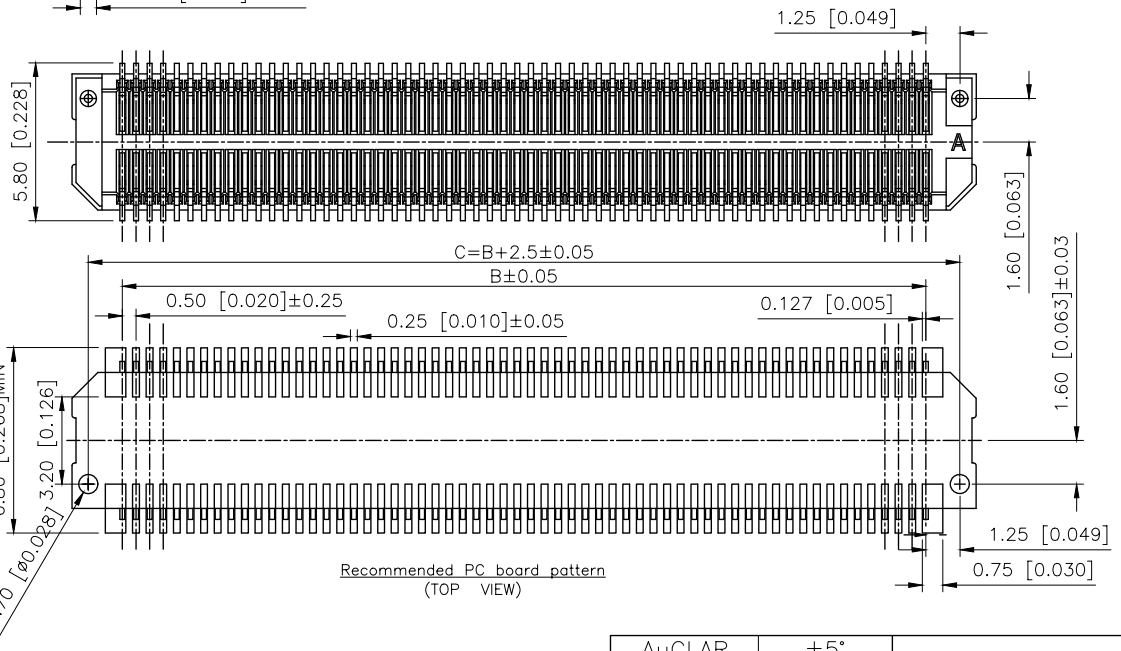

Recommended PC board pattern
(TOP VIEW)

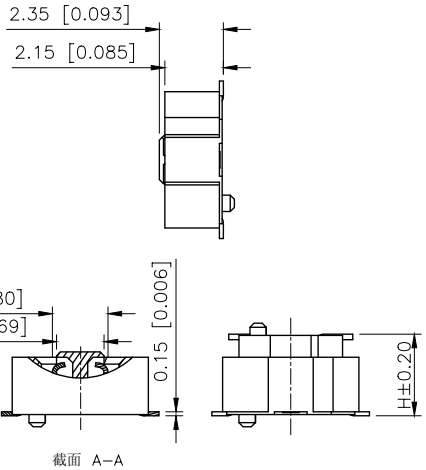

截面 A–A

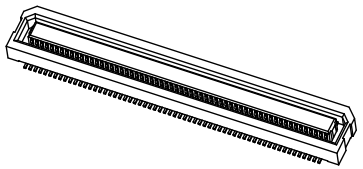

Specifications:
规格：
Voltage rating:60V AC/DC
额定电压：60V AC/DC
Current rating:0.5A AC/DC
额定电流：0.5A AC/DC
Withstanding voltage:1500V AC/minute
耐受电压：1500V AC/分钟
Temperature range:−55℃−+105℃
温度范围：−55℃−+105℃
Insulation resistance:500MΩ min
绝缘电阻：500MΩ Min
Contact resistance:80mΩ Max
接触电阻：80mΩ Max

PART NO.:

X0528 F V S−120 A S−LP V01
① ② ③ ④ ⑤ ⑥ ⑦ ⑧ ⑨

①Series No
②Category:F−Female
③Welding Board Angle:V−Stright 180°
④Welding Way: S−SMT
⑤Row No.Pin No:XX−20−120P
⑥Female Height:A=2.35mm;
⑦Special No:S−With positioning Columm
⑧Material:LP−LCP UL 94V−0
⑨Plating:V01−Gold Flash

H
3.0mm
3.5mm
4.0mm

Poles	A	B
20	8.20	4.50
22	8.70	5.00
30	10.70	7.00
34	11.70	8.00
40	13.20	9.50
50	15.70	12.00
60	18.20	14.50
70	20.30	17.00
80	23.20	19.50
100	28.20	24.50
120	33.20	29.50

PART NO	Material	Material(Pin)	Suitable XKB Wafer
X0582FVS−120AS−LPV01	LCP	Phosphor copper	X0582W

AuGLAR	±5°
X.	±0.40
X.x	±0.30
X.xx	±0.20
X.xxx	±0.15
UNSPECIFIED TOLERAuCES	

XKB Connection 星创

DESIGN	阿树	VIEW:	MODEL TYPE: 0.5mm BTB Style Connector
CHECKED		UNIT: mm/in	PART NO.: X0582FVS−120AS−LPV01
APPROVED		SIZE: A4	DWG NO.:

XKB INDUSTRIAL PRECISION CO.,LIMITED

SCALE	PAGE	REVISION
N/A	1/1	A1