REVISIONS					
REV.	ECN NO.	LOCATION	DESCRIPTION	DATE	DESIGN
A0	N/A		INITIAL RELEASE	/	/
A1	N/A		图面升级整理图面	2024.9.12	阿树

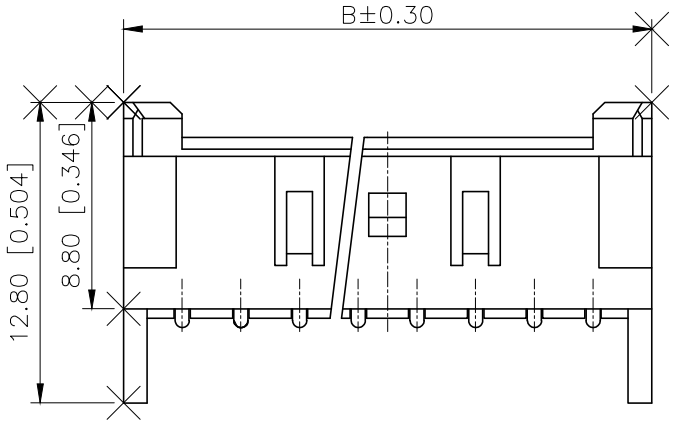

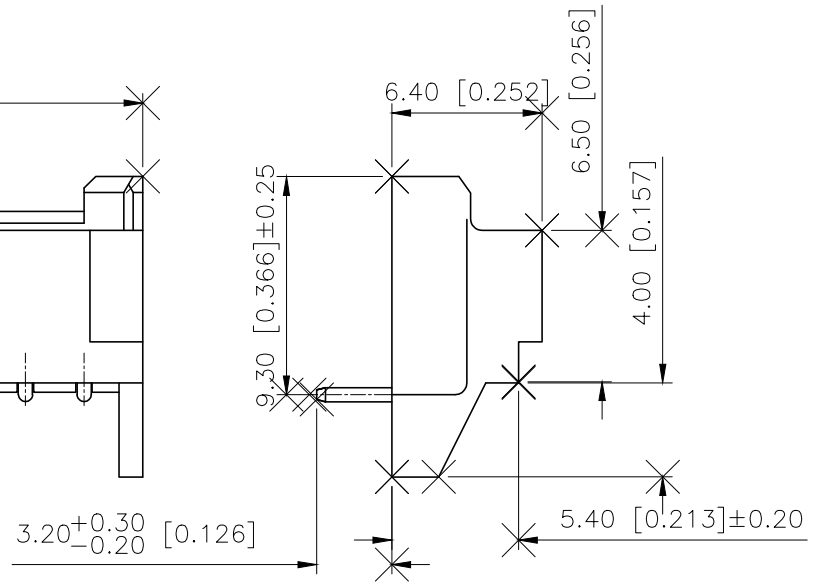

■SPECIFICATIONS
- •Voltage rating:250V AC/DC
- •Withstanding Voltage:1000V AC/minute
- •Temperature range:−40°C~+125°C
- •Insulation resistance:≥500MΩ
- •Contact resistance:≤10mΩ
- •After environmental testing:≤20mΩ

PART NO.:

X2508 W R−06−N0 SN
① ② ③ ④ ⑤ ⑥

①Series No
②Category:W−Wafer
③Welding Board Angle:R−Stright 90°
④Row No.Pin No:XX−02~20Pin
⑤Material: N0−PA66 UL94V−0
⑥Planting:SN−Tin Plated

Poles	Dimensions(mm)	
	A	B
02	2.50	7.50
03	5.00	10.00
04	7.50	12.50
05	10.00	15.00
06	12.50	17.50
07	15.00	20.00
08	17.50	22.50
09	20.00	25.00
10	22.50	27.50
11	25.00	30.00
12	27.50	32.50
13	30.00	35.00
14	32.50	37.50
20	47.50	52.50

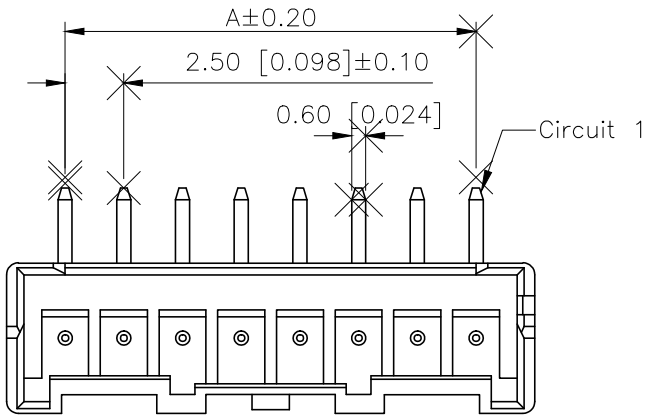

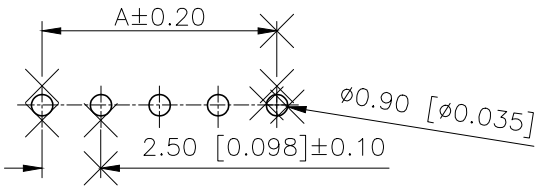

PCB LAYOUT

PART NO	Material	Material(pin)	Finish(pin)	Suitable XKB Housing
X2508WR−06−N0SN	Nyoln 66 UL 94V−0	Brass	Tin−Plated	X2508H

AuGLAR	±5°
X.	±0.40
X.x	±0.30
X.xx	±0.20
X.xxx	±0.15
UNSPECIFIED TOLERAuCES	

XKB Connection

DESIGN	阿树	VIEW:	MODEL TYPE: 2.50mm Crimp Style Connectors
CHECKED		UNIT: mm/in	PART NO.: X2508WR−06−N0SN
APPROVED		SIZE: A4	DWG NO.: X−X2508WR−06−N0SN

XKB INDUSTRIAL PRECISION CO.,LIMITED

SCALE	PAGE	REVISION
N/A	1/1	A1