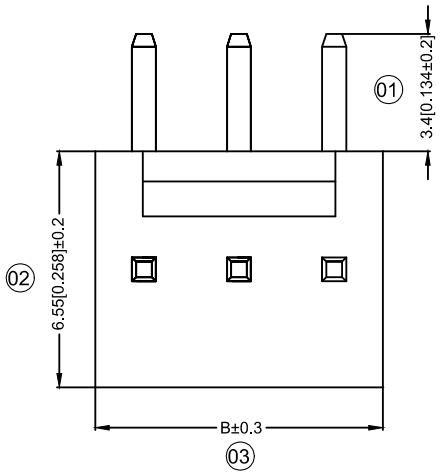

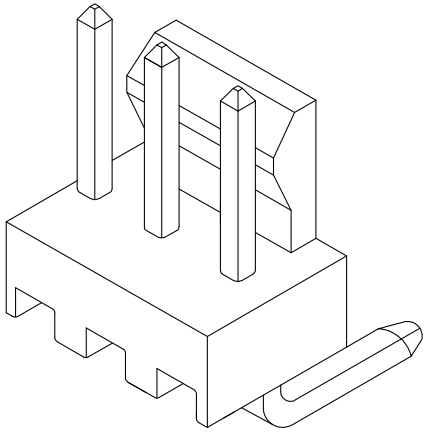

X2510 W R - 05 SP- N0SN
① ②③④ ⑤ ⑥ ⑦⑧ ⑨

①Series No.
②Category:
W-wafer
③Welding Board Angle:
R-90°
④Welding Way:
Blank-DIP
⑤Row No.-Pin No.
XX-Single row
⑥Special NO.
SP-Short back
⑦Material:
N0-PA66 94V-0
⑧Planting Category:
V**:All Gold-Plated
*01-Gold Flash ; *02-2U" ; *03-3U" ; *05-5U"
*10-10U" ;*15-15U" ; *30-30U" ; *50-50U"
SN-Bright tin plating 70-120U"
SN-Bright tin plating 120U"Min. ;
SW-Fog Tin plating
⑨Color:
Blank-natural color

Poles	Dimensions (mm)	
	A	B
2	2.54	5.08
3	5.08	7.62
4	7.62	10.16
5	10.16	12.70
6	12.70	15.24
7	15.24	17.78
8	17.78	20.32
9	20.32	22.86
10	22.86	25.40
11	25.40	27.94
12	27.94	30.48
13	30.48	33.02
14	33.02	35.56
15	35.56	38.10
16	38.10	40.64
17	40.64	43.18
18	43.18	45.72
19	45.72	48.26
20	48.26	50.80

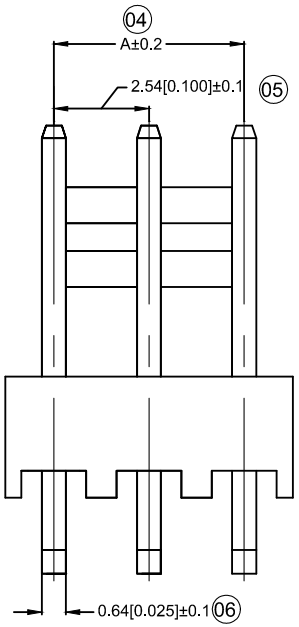

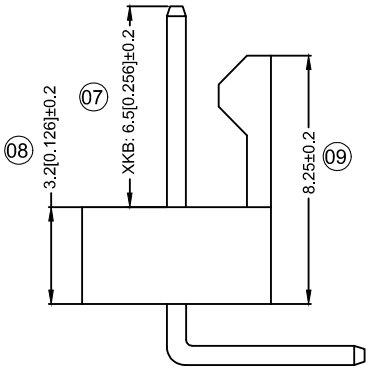

Specifications:
规格:
Voltage rating:250V AC/DC
额定电压：250V AC/DC
Current rating：3A AC / DC
额定电流: 3A AC / DC
Withstanding voltage: 800V AC/minute
耐压电压：800V AC/minute
Temperature range:-25℃～+85℃
温度范围：-25℃～+85℃
Insulation resistance:≥1000MΩ
绝缘电阻：≥1000MΩ
Contact resistance：≤10mΩ
接触电阻:≤10mΩ
After environment testing: ≤20mΩ
环境试验后: ≤20mΩ

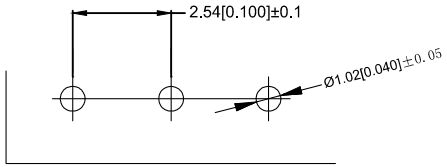

Recommand PCB Layout

X2510WR-05SP-N0SN	Nylon 66 UL 94V-0	Brass	Tin-Plated	X2510H
PART N0	Material	Material(Pin)	Finish(Pin)	Mates With XKB Housing

MARK	DESCRIPTION	DATE	REVISED	APPROVED
ΔX				
ΔX				
ΔX				

REVISIONS

UNSPECIFIED TOLERANCES	
ANGLAR	±5°
L≤ 4	±0.2
4<L≤ 16	±0.3
16<L≤ 63	±0.4
L> 63	±0.5

DSND		DATE		SCALE: N/A
DWN		DATE		VIEW:
CHKD		DATE		UNIT: mm/in
APPD		DATE		SIZE: A4

MODEL TYPE:
2.54 mm Crimp Style Connectors
PART NO.:
X2510WR-05SP-N0SN
DWG NO.:
X-X2510WR-05SP-N0SN

XKB INDUSTRIAL PRECISION CO.,LIMITED

WEIGHT	SHEET	REVISION
1.0g	1/1	A0