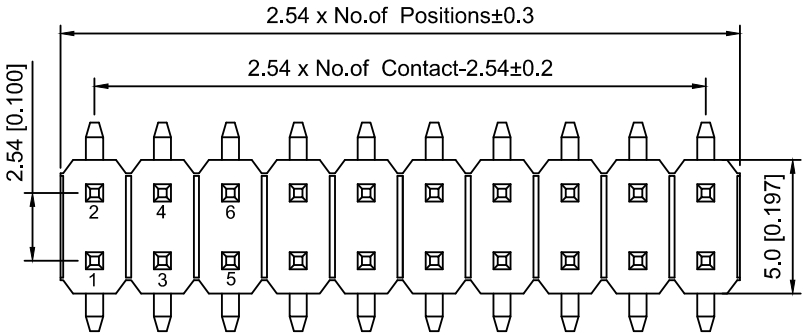

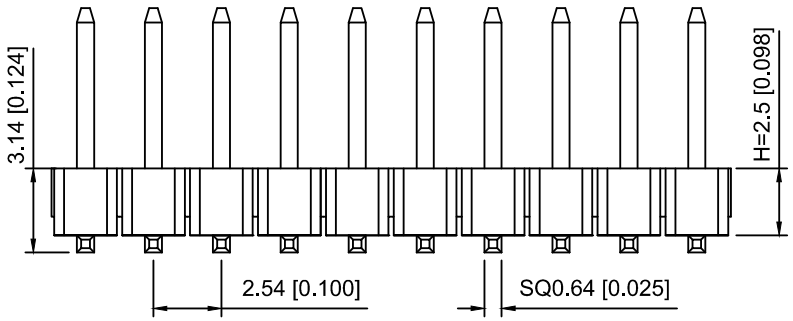

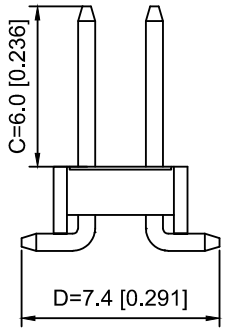

Specifications:
规格：
Voltage rating:250V AC/DC
额定电压：250V AC/DC
Current rating:3A AC/DC
额定电流：3A AC/DC
Withstanding voltage:1000V AC/minute
耐受电压：1000V AC/分钟
Temperature range:-40℃-+105℃
温度范围：-40℃-+105℃
Insulation resistance:≥1000MΩ
绝缘电阻：≥1000MΩ
Contact resistance:≤20mΩ
接触电阻：≤20mΩ
Material:PA6T UL94V-0
材质：PA6T UL94V-0
Plating Category:1U"Gold
镀层：1U"Gold
Reflow soldring temperature:260±5℃，10S
回流焊温度：260±5℃，10S

X6521 W V S - 2x08 H - C60 D74
① ② ③ ④ ⑤ ⑥ ⑦ ⑧

1.Series No
2.Category:W-Wafer
3.Welding Board Angle:V-Stright 180°
4.Row No.Pin No:2xXX-2x01~2x40P
5.Plastic Height:H=2.5mm
6.Pin Length:C=6.0mm
7.Pin pitch:D=7.4mm

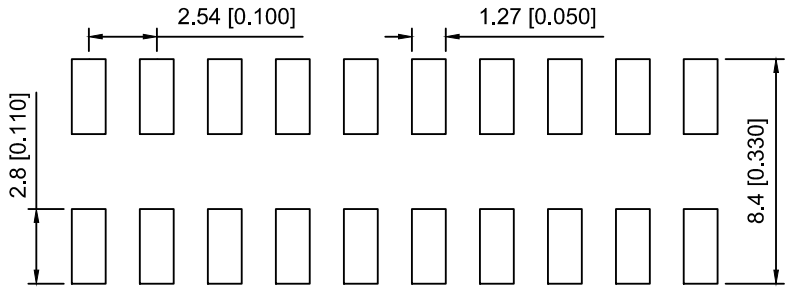

PCB LAYOUT

X6521WVS-2x08H-C60D74	PA6T	Brass	X6521F
PART N0	Material	Material(Pin)	Suitable XKB Female

MARK	DESCRIPTION	DATE	REVISED	APPROVED
ΔX				
ΔX				
ΔX				

REVISIONS

ANGLAR	±5°
L≤ 4	±0.2
4<L≤ 16	±0.3
16<L≤ 63	±0.4
L> 63	±0.5

UNSPECIFIED TOLERANCES

www.helloxkb.com www.helloxkb.cn www.xk-dg.cn

XKB

XKB INDUSTRIAL PRECISION CO.,LIMITED

DSND		SCALE: N/A	MODEL TYPE: 2.54mm BTB Connector
DWN		VIEW:	PART NO.: X6521WVS-2x08H-C60D74
CHKD		UNIT: mm/in	DWG NO.: X-X6521WVS-2x08H-C60D74
APPD		SIZE: A4	

WEIGHT	SHEET	REVISION
	1/1	A0