REVISIONS					
REV.	ECN NO.	LOCATION	DESCRIPTION	DATE	DESIGN
A0	N/A		INITIAL RELEASE	/	/
A1	N/A		图面升级整理图面	2024.12.26	阿树

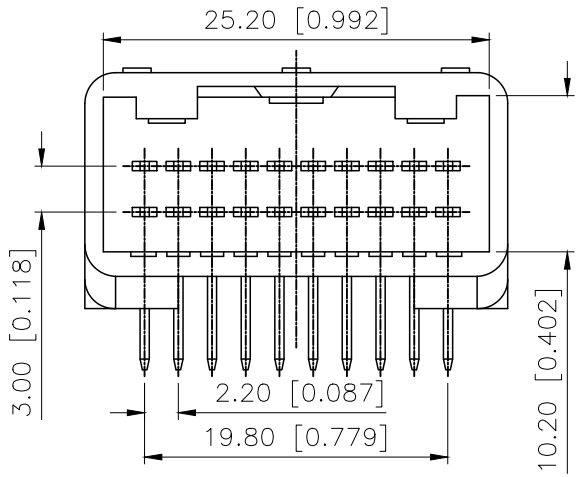

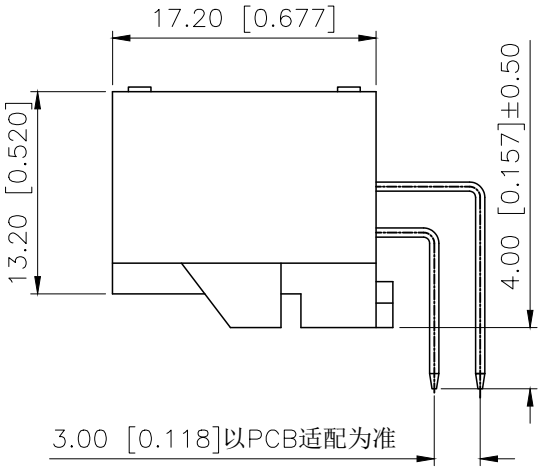

Current rating:3A AC/DC
额定电流：3A AC/DC
Temperature range:−40℃−+125℃
温度范围：−40℃−+125℃

PART NO.:

K 137635 W R−2x10−PT SN X
① ② ③ ④ ⑤ ⑥ ⑦ ⑧

①K:XKBTEK−Car Connector
②XKB Series No
③Category:W−Wafer
④Welding Board Rangle:R−Stright 90°
⑤Row No.Pin No:2x10 Pin
⑥Material:PT−PBT
⑦Palting:SN−Plated Tin
⑧Color:B−Black ; W−White

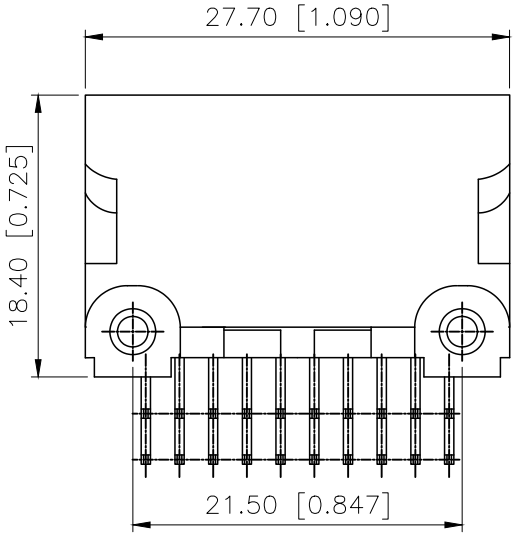

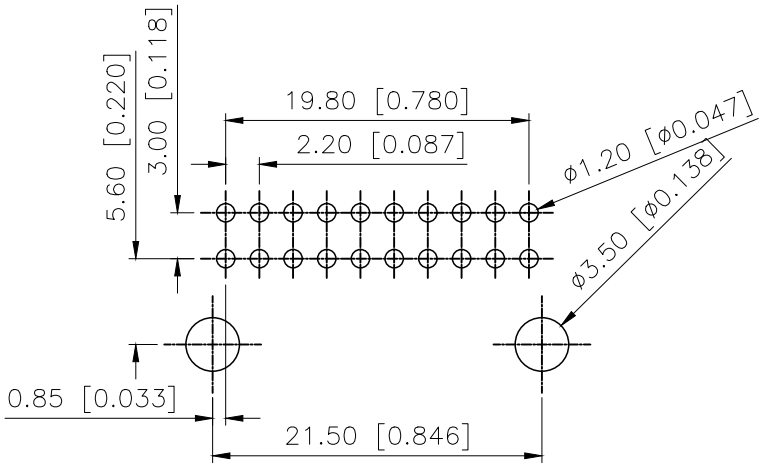

PCB LAYOUT

K137635WR−2xXX−PTSNX	PBT	Brass	K137635HM
PART NO	Material	Material(Pin)	Suitable XKB Housing

AuGLAR	±5°
X.	±0.40
X.x	±0.30
X.xx	±0.20
X.xxx	±0.15
UNSPECIFIED TOLERAuCES	

XKB Connection 星创

DESIGN	阿树	VIEW:	MODEL TYPE: 2.2mm Automobile connector
CHECKED		UNIT: mm/in	PART NO.: K137635WR−2x10−PTSNX
APPROVED		SIZE: A4	DWG NO.:

XKB INDUSTRIAL PRECISION CO.,LIMITED

SCALE	PAGE	REVISION
N/A	1/1	A1