REVISIONS					
REV.	ECN NO.	LOCATION	DESCRIPTION	DATE	DESIGN
A0	N/A		INITIAL RELEASE	/	/
A1	N/A		图面升级整理图面	2024.9.27	阿树

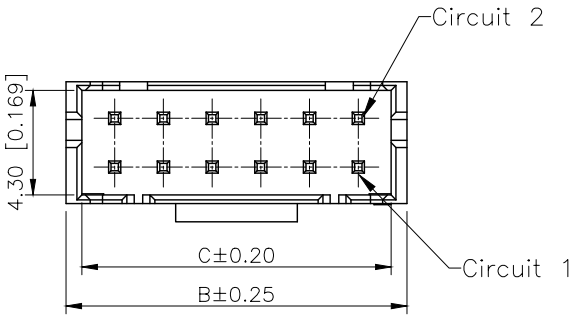

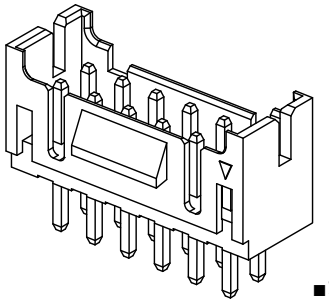

PART NO.:

X2026 W V-2x10 B-N0 V01 XX
① ② ③ ④ ⑤ ⑥ ⑦ ⑧

■SPECIFICATIONS
- •Voltage rating:250V AC/DC
- •Current rating:3A AC/DC
- •Withstanding Voltage:800V AC/minute
- •Temperature range:-40°C~+125°C
- •Insulation resistance:≥1000MΩ
- •Contact resistance:≤10mΩ
- •After environmental testing:≤20mΩ

①Series No
②Category:W-Wafer
③Welding Board Angle:V-Stright 180°
④Row No.Pin No:2xXX-2x02~2x25Pin
⑤Plug the Pin&Special N0:
B-With Lock In the middle
⑥Material:N0-PA66 94V-0
⑦Plating Category:V01: GoldGF Tin Plating
⑧Color:Blank-Natural Color

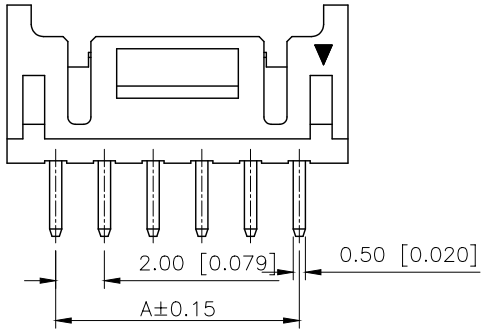

05P~13P
Shape(Scale1:1)

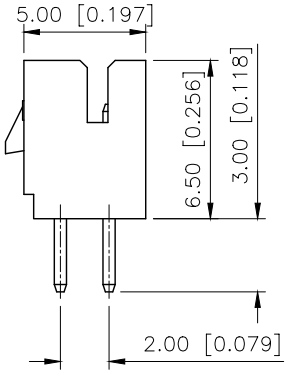

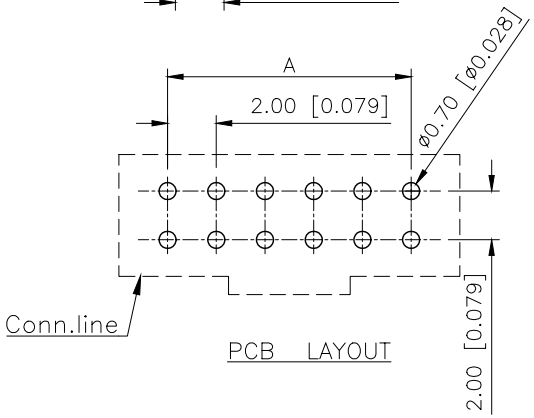

PCB LAYOUT

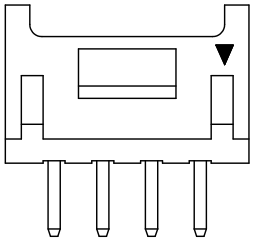

02P~04P
Shape(Scale1:1)

poles	Dimensions(mm)			poles	Dimensions(mm)			Poles	Dimensions(mm)		
	A	B	C		A	B	C		A	B	C
2x02	2.00	6.00	4.70	2x10	18.00	22.00	20.70	2x18	34.00	38.00	36.70
2x03	4.00	8.00	6.70	2x11	20.00	24.00	22.70	2x19	36.00	40.00	38.70
2x04	6.00	10.00	8.70	2x12	22.00	26.00	24.70	2x20	38.00	42.00	40.70
2x05	8.00	12.00	10.70	2x13	24.00	28.00	26.70	2x21	40.00	44.00	42.70
2x06	10.00	14.00	12.70	2x14	26.00	30.00	28.70	2x22	42.00	46.00	44.70
2x07	12.00	16.00	14.70	2x15	28.00	32.00	30.70	2x23	44.00	48.00	46.70
2x08	14.00	18.00	16.70	2x16	30.00	34.00	32.70	2x24	46.00	50.00	48.70
2x09	16.00	20.00	18.70	2x17	32.00	36.00	34.70	2x25	48.00	52.00	50.70

PART NO	Material	Material(pin)	Finish(Pin)	Suitable XKB Terminal
X2026WV-2x10B-N0V01	PA66 UL 94V-0	Brass	Tin-Plated	X2026H-B

AuGLAR	±5°
X.	±0.40
X.x	±0.30
X.xx	±0.20
X.xxx	±0.15
UNSPECIFIED TOLERAuCES	

XKB Connection

DESIGN	阿树	VIEW:	MODEL TYPE: 2.00mm Crimp Style Connector
CHECKED		UNIT: mm/in	PART NO.: X2026WV-2x10B-N0V01
APPROVED		SIZE: A4	DWG NO.: X-X2026WV-2x10B-N0V01

XKB INDUSTRIAL PRECISION CO.,LIMITED

SCALE	PAGE	REVISION
N/A	1/1	A1