REVISIONS					
REV.	ECN NO.	LOCATION	DESCRIPTION	DATE	DESIGN
A0	N/A		新增卡扣R角，增强卡扣强度	2024.03.14	桑 甚

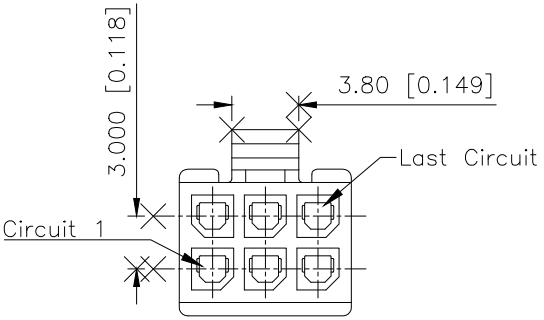

2x03–2x12P

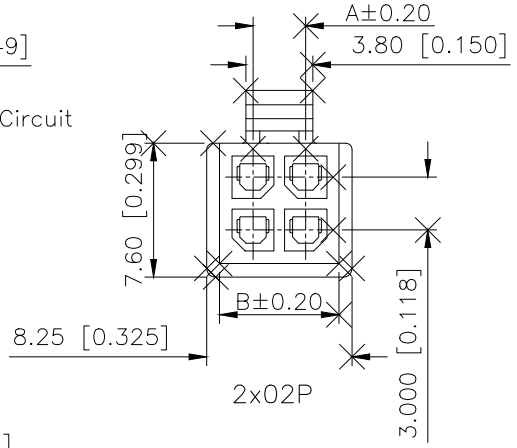

2x02P

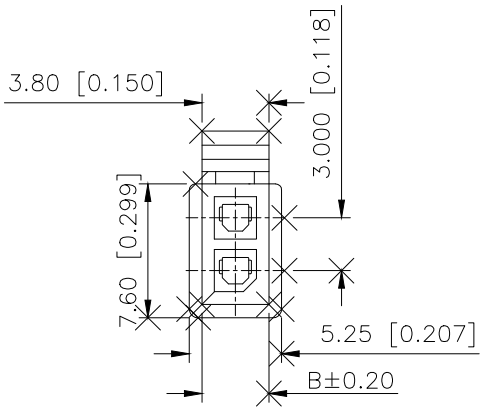

2x01P

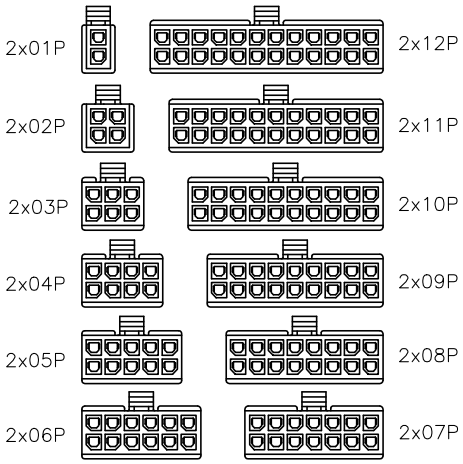

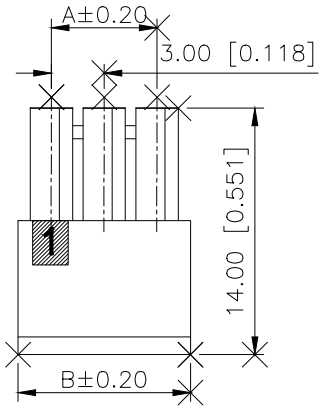

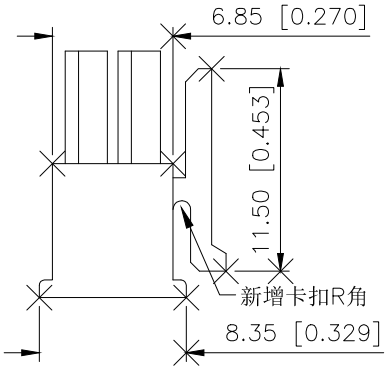

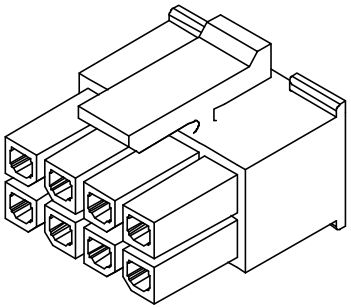

3D VIEW

Specifications(规格):

1. Voltage rating(额定电压):250V AC DC
2. Current rating(额定电流):5.0A AC/DC
3. Withstanding voltage(耐压值):≥1500V AC/minute
4. Insulation resistance(绝缘电阻):1000MΩ Min
5. Contact resistance(绝缘电阻):20mΩ Max
6. Temperature range(使用温度):-25℃~+85℃

PART NO.:

C3030 H M–2x10 N2
① ② ③ ④ ⑤

① Series No
② Category:H-Housing
③ Welding Board Angle:M-Male Housing
④ Row No-Pin: 2x01-2x12P
⑤ Material:N2-PA66, UL 94V-2, BLACK

POLES	DIM.A	DIM.B
2x02	3.00	6.85
2x03	6.00	9.85
2x04	9.00	12.85
2x05	12.00	15.85
2x06	15.00	18.85
2x07	18.00	21.85
2x08	21.00	24.85
2x09	24.00	27.85
2x10	27.00	30.85
2x11	30.00	33.85
2x12	33.00	36.85

C3030HM–2x10–N2	PA66 94V–2	BLACK	C3030W	C3030TF
PART NO.	MATERIAL	COLOR	Suitable XKB Wafer	Suitable XKB Terminal

ANGLAR	±5°
X.	±0.40
X.x	±0.30
X.xx	±0.20
X.xxx	±0.15
UNSPECIFIED TOLERANCES	

XKB INDUSTRIAL PRECISION CO.,LIMITED

DESIGN	桑 甚	VIEW:	MODEL TYPE: 3.0mm Crimp Style Housing
CHECKED		UNIT: mm/in	PART NO.: C3030HM–2x10–N2
APPROVED		SIZE: A4	DWG NO.: X–C3030HM–2x10–N2

SCALE	PAGE	REVISION
N/A	1/1	A0