REVISIONS					
REV.	ECN NO.	LOCATION	DESCRIPTION	DATE	DESIGN
A0	N/A		INITIAL RELEASE	/	/
A1	N/A		图面升级整理图面	2025.04.23	阿树

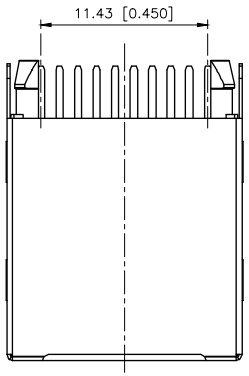

TOP VIEW

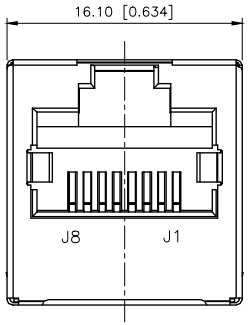

FRONT VIEW

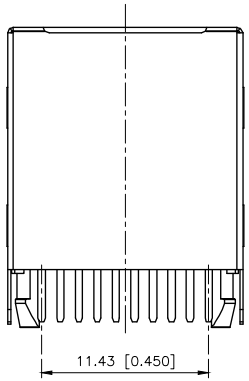

BOTTOM VIEW

ELECTRICAL电气:
1.Turn ratio 匝数比:1~3:J1~J2=1CT:1CT(±2%)
4~6:J3~J6=1CT:1CT(±2%)
2.OCL 已占搭载量:350uH Min.at 100KHz 100mV 8mA DC.
3.Insertion Loss 插入损耗: −1.0 dB Max 1~100MHz
4.Return loss 回程损耗: −20dB Min 1~10MHz
−16dB Min 10~30MHz
−12dB Min 30~60MHz
−10dB Min 60~80MHz
5.Cross talk 声道串扰: −40dB Min 1~30MHz;
−35dB Min 30~60MHz;
−30dB Min 60~100MHz;
6.CMR 共模抑制: −35dB Min 1~100MHz;
7.Hi−Pot 耐压测试:1500V AC & 2250V DC 6S
mA PRI TO SEC

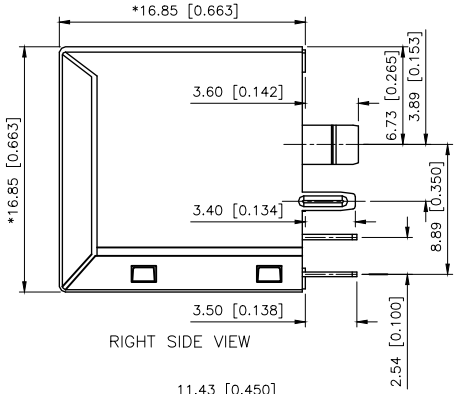

RIGHT SIDE VIEW

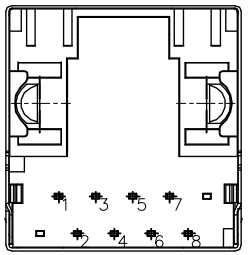

BACK VIEW

MATERIAL 材料:
HOUSING 外壳: PBT,UL94V−0,BLACK.
TERMINALS BRACKET 端子支架: PBT,UL94V−0,BLACK.
SHIELD 保护物: C2680,T=0.20MM,NICKEL PLATING ON ALL AREA.
TERMINAL 端子: PHOSPHOR BRONZE C5210,T=0.35MM,
GOLD PLATING ON CONTACT AREA.

MECHANICAL 机械:
DURABILITY 耐用性: 750 CYCLES MIN.
MATING FORCE 配合力: 23N MAX.
OPERATING TEMPERATURE 工作温度: −40°C~+85°C.
STORAGE TEMPERATURE 储存温度: −40°C~+85°C.
ALL CRITICAL DIMENSIONS WITH "*"

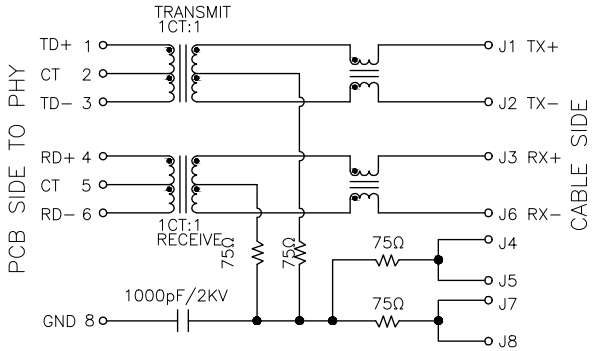

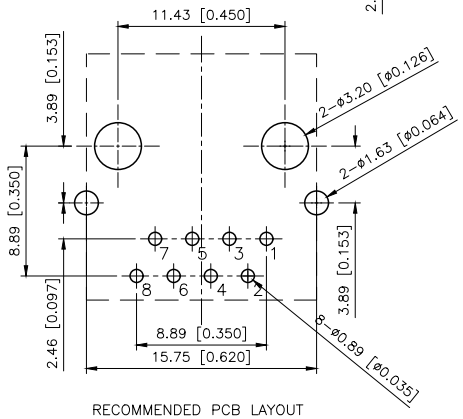

RECOMMENDED PCB LAYOUT
VIEWED FROM COMPONENT SIDE

X05AB083GW0D4B

1:Au=1U"
3:Au=3U"
4:Au=6U"
5:Au=15U"
6:Au=30U"

AuGLAR	±5°
X.	±0.40
X.x	±0.30
X.xx	±0.20
X.xxx	±0.15
UNSPECIFIED TOLERAuCES	

XKB Connection 星创

DESIGN	阿树	VIEW:	MODEL TYPE: RJ JACK
CHECKED		UNIT: mm/in	PART NO.: X05AB083GW0D4B
APPROVED		SIZE: A4	DWG NO.: X−X05AB083GW0D4B

XKB INDUSTRIAL PRECISION CO.,LIMITED

SCALE	PAGE	REVISION
N/A	1/1	A1