REVISIONS					
REV.	ECN NO.	LOCATION	DESCRIPTION	DATE	DESIGN
A0	N/A		INITIAL RELEASE	/	/
A1	N/A		图面升级整理图面	2025.2.11	阿树

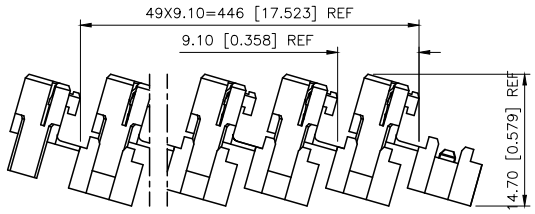

Shipping Arrangement:50 sets per strip
Shipped in carton box

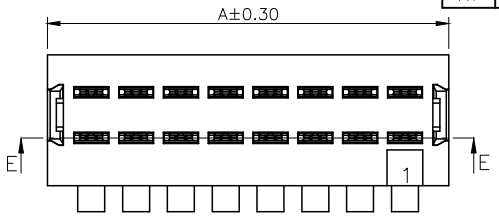

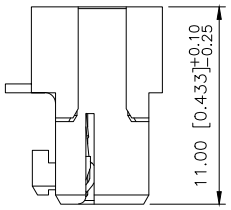

Fully loaded

Specifications:
规格：
Voltage rating:250V AC/DC
额定电压：250V AC/DC
Current rating:2A AC/DC
额定电流：2A AC/DC
Withstanding voltage:1200V AC/minute
耐受电压：1200V AC/分钟
Temperature range:−40℃−+125℃
温度范围：−40℃−+125℃
Insulation resistance:1000MΩ min
绝缘电阻：1000MΩ Min
Contact resistance:10mΩ Max
接触电阻：10mΩ Max

PART NO.:

X25071 H I−08 E 12−PT SN
① ② ③ ④ ⑤ ⑥ ⑦ ⑧

①Series No
②Category:H−HSG
③Category:I−Punctured type
④Row No.Pin No:XX−02~17 Pin
⑤Appearance type:E Type
⑥pacer bar:For example12−Keying between pin 1 and pin 2
23−Keying between pin 2 and pin 3...When the pin number is above 10,use the letters A ,B C...A for 10,B for 11...
Blank−No Keying
⑦Material:PT−PBT ;N0−PA66 UL 94V−0
⑧Platig:SN−Plated Tin; V01−Gold Flash;
V03−Gold 3u; V15−Gold 15u;V30−Gold 30u

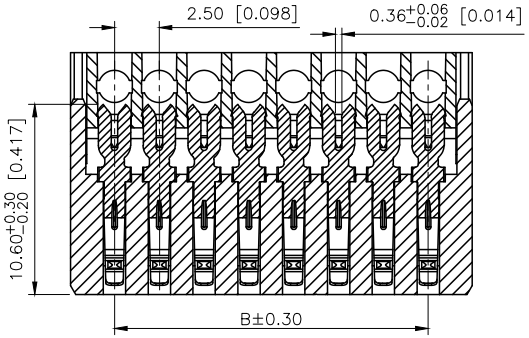

SEC:E−E

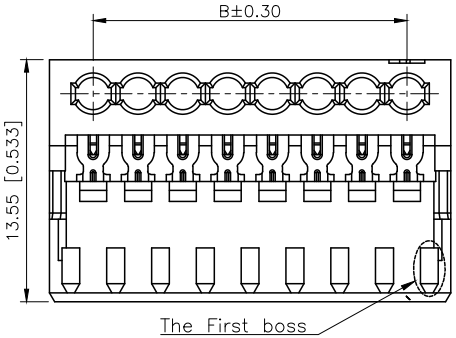

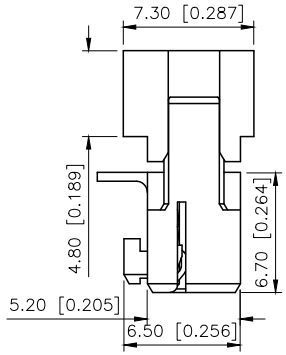

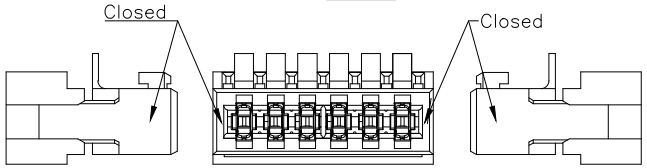

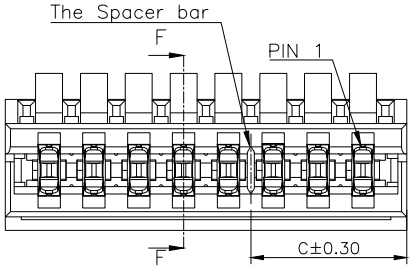

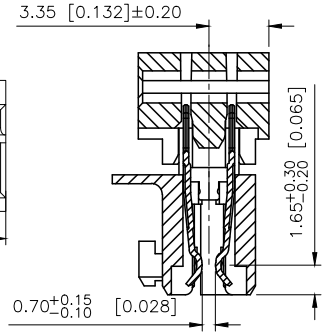

SEC:F−F

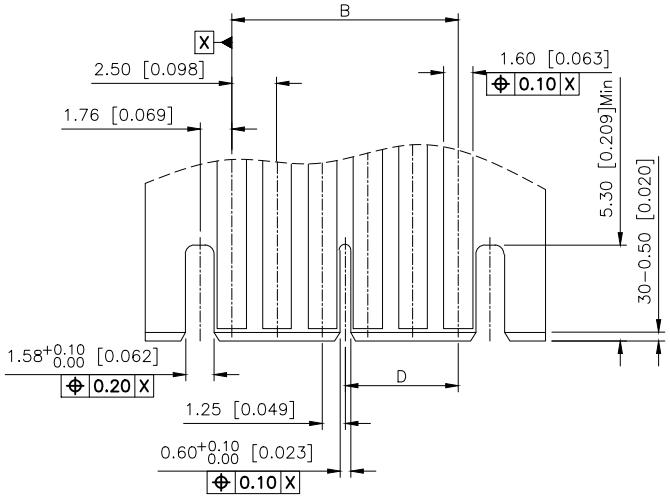

Poles	Dimensions(mm)		Spacer bar	C	D
	A	B	00	/	/
02	7.40	2.50	12	3.70	1.25
03	9.90	5.00	23	6.20	3.75
04	12.40	7.50	34	8.70	6.25
05	14.90	10.00	45	11.20	8.75
06	17.40	12.50	56	13.70	11.25
07	19.90	15.00	67	16.20	13.75
08	22.40	17.50	78	18.70	16.25
09	24.90	20.00	89	21.20	18.75
10	27.40	22.50	9A	23.70	21.25
11	29.90	25.00	AB	26.20	23.75
12	32.40	27.50	BC	28.70	26.25
13	34.90	30.00	CD	31.20	28.75
14	37.40	32.50	DE	33.70	31.25
15	39.90	35.00	EF	36.20	33.75
16	42.40	37.50	FG	38.70	36.25
17	44.90	40.00	GH	41.20	38.75

X25071HI−06E45−PTSN	AWG24~22	Phosphor
PART N0	Wire Range	Material(Pin)

AuGLAR	±5°
X.	±0.40
X.x	±0.30
X.xx	±0.20
X.xxx	±0.15
UNSPECIFIED TOLERAuCES	

XKB Connection

DESIGN	阿树	VIEW:	MODEL TYPE: 2.50mm Pitch Rast Connector
CHECKED		UNIT: mm/in	PART NO.: X25071HI−08E12−PTSN
APPROVED		SIZE: A4	DWG NO.:

XKB INDUSTRIAL PRECISION CO.,LIMITED

SCALE	PAGE	REVISION
N/A	1/1	A1

www.helloxkb.com www.helloxkb.cn www.xk−dg.cn