| REVISIONS | | | | | |
|---|---|---|---|---|---|
| REV. | ECN NO. | LOCATION | DESCRIPTION | DATE | DESIGN |
| A0 | N/A | | INITIAL RELEASE | / | / |
| A1 | N/A | | 图面升级整理图面 | 2024.9.27 | 阿树 |

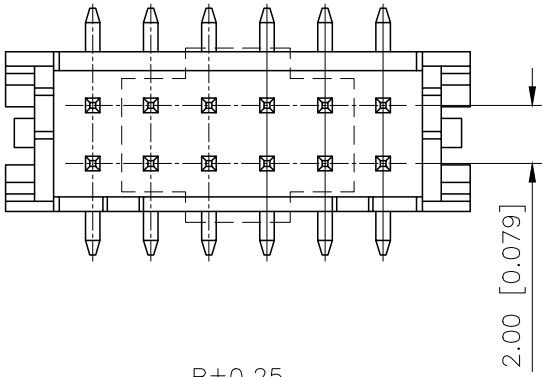


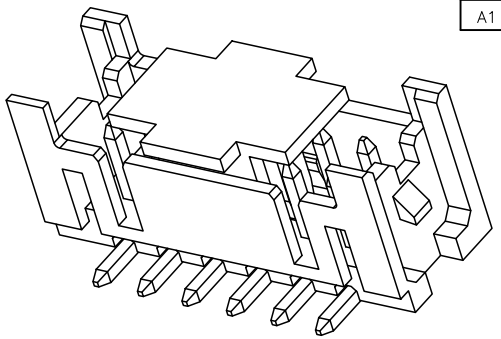

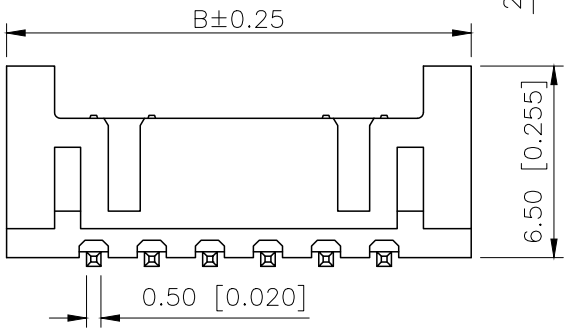


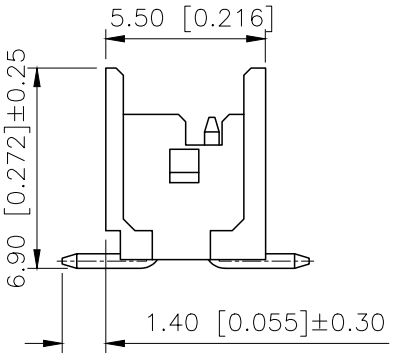


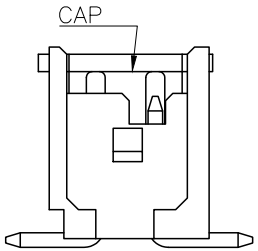


PART NO.:

X2026 W V S–2x16 A–6T SN
① ② ③ ④ ⑤ ⑥ ⑦ ⑧

①Series No
②Category:W–Wafer
③Welding Board Angle:V–Stright 180°
④Welding Way:S–SMT
⑤Row No.Pin No:2xXX–2x02~2x20Pin
⑥Plug the Pin&Special N0:
A–With Lock on both side
⑦Material:6T–PA6T 94V–0;
⑧Plating Category:SN–Bright Tin Plating
SW–Matte Tin

| Poles | Dimensions(mm) | |
|---|---|---|
| | A | B |
| 2x02 | 2.00 | 8.00 |
| 2x03 | 4.00 | 10.00 |
| 2x04 | 6.00 | 12.00 |
| 2x05 | 8.00 | 14.00 |
| 2x06 | 10.00 | 16.00 |
| 2x07 | 12.00 | 18.00 |
| 2x08 | 14.00 | 20.00 |
| 2x09 | 16.00 | 22.00 |
| 2x10 | 18.00 | 24.00 |
| 2x11 | 20.00 | 26.00 |
| 2x12 | 22.00 | 28.00 |
| 2x20 | 38.00 | 44.00 |

■SPECIFICATIONS
•Voltage rating:250V AC/DC
•Current rating:3A AC/DC
•Withstanding Voltage:800V AC/minute
•Temperature range:–40°C~+125°C
•Insulation resistance:≥1000MΩ
•Contact resistance:≤10mΩ
•After environmental testing:≤20mΩ

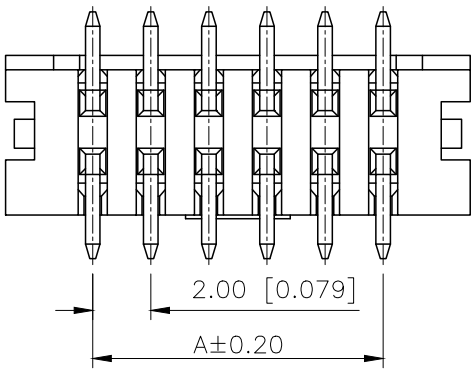


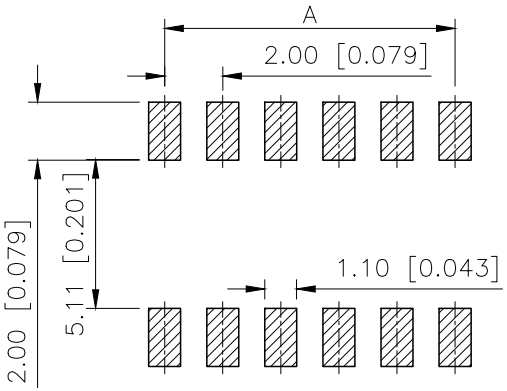


PCB LAYOUT

| X2026WVS–2x16A–6TSN | PA6T | Tin | X2026H |
|---|---|---|---|
| PART N0 | Material | Plating | Suitable XKB Housing |

| AuGLAR | ±5° |
|---|---|
| X. | ±0.40 |
| X.x | ±0.30 |
| X.xx | ±0.20 |
| X.xxx | ±0.15 |
| UNSPECIFIED TOLERAuCES | |

XKB Connection 星创

| | | | |
|---|---|---|---|
| DESIGN | 阿树 | VIEW: | MODEL TYPE: 2.00mm Crimp Style Connector |
| CHECKED | | UNIT: mm/in | PART NO.: X2026WVS–2x16A–6TSN |
| APPROVED | | SIZE: A4 | DWG NO.: |

XKB INDUSTRIAL PRECISION CO.,LIMITED

| SCALE | PAGE | REVISION |
|---|---|---|
| N/A | 1/1 | A1 |