REVISIONS					
REV.	ECN NO.	LOCATION	DESCRIPTION	DATE	DESIGN
A0	N/A		INITIAL RELEASE	/	/
A1	N/A		图面升级整理图面	2025.06.05	阿树

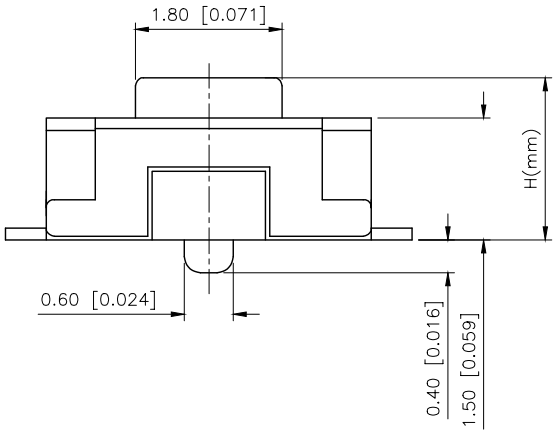

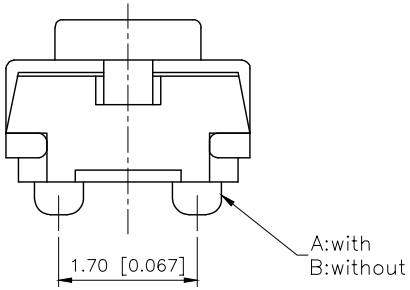

SPECIFICATION
Contact Rating: 50mA,12V DC
Contact Resistance: 100mΩ max
Insulation Resistance: 100MΩ min.500V DC
Dielectric Strength: 250V AC/1minute
Travel: 0.13mm
Operating Temp: −30℃~+85℃
Storage Temp: −30℃~+80℃

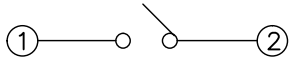

Circuit Diagram

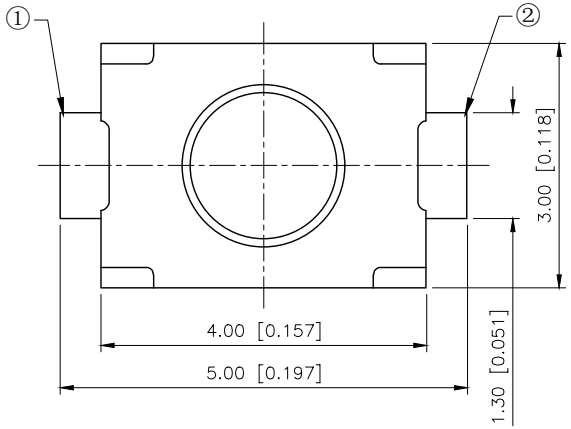

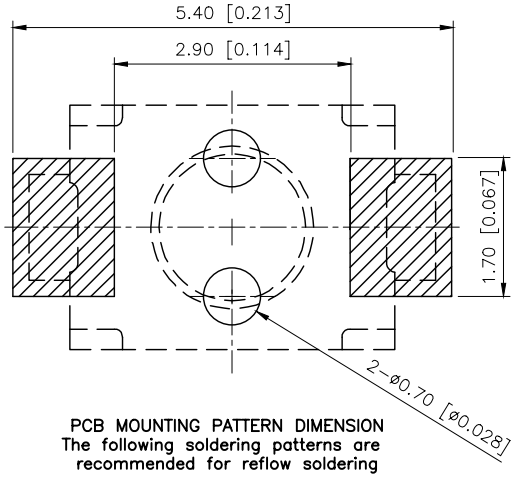

PCB MOUNTING PATTERN DIMENSION
The following soldering patterns are recommended for reflow soldering

PAPT NO	TS-1185-B-A-A-A
Operating Force	A:100gf B:160gf C:260gf
Height	H:A:2.0 B:2.5
Fixed column	A:With B:Without
Keystake	A:PA46 B:Silica gel

ITEM	PAPT NAMF	QTY	MATERIAL	FINISHING
⑤	Terminal	2	Brass（0.30t）	Plating silvering
④	Contact	1	F.ag/SUS	Natural
③	Base	1	LCP	
②	Cover	1	Brass	Plating Nicke
①	Keystake	1	LCP	

AuGLAR	±5°
X.	±0.40
X.x	±0.30
X.xx	±0.20
X.xxx	±0.15
UNSPECIFIED TOLERAuCES	

XKB Connection

DESIGN	阿树	VIEW:	MODEL TYPE: TACT SWITCH
CHECKED		UNIT: mm/in	PART NO.: TS-1185-B-A-A-A
APPROVED		SIZE: A4	DWG NO.: TS-1185-B-A-A-A

XKB INDUSTRIAL PRECISION CO.,LIMITED

SCALE	PAGE	REVISION
N/A	1/1	A1

www.helloxkb.com www.helloxkb.cn www.xk-dg.cn