REVISIONS					
REV.	ECN NO.	LOCATION	DESCRIPTION	DATE	DESIGN
A0	N/A		INITIAL RELEASE	2024.09.03	
/	/		/	/	/

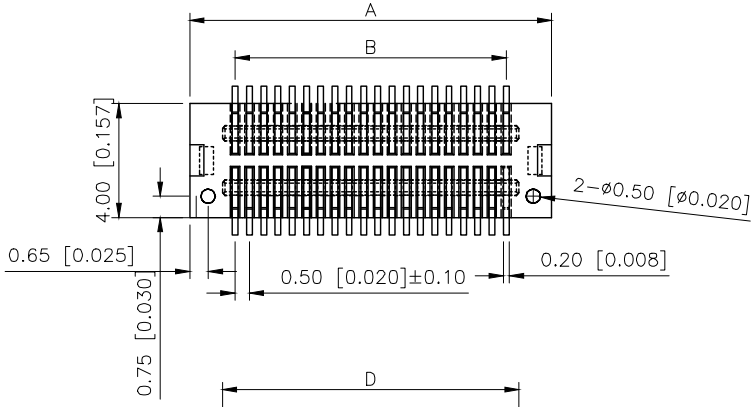

ASSEMBLY

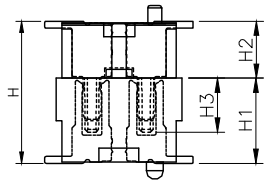

Electrical:
Vlotag Rating:50V AC(rms)/DC
Current Rating:0.5A AC(rms)/DC
Contact Resistance:50mΩ Max
Insulation Resistance:100MΩ min
Dlelectric Withstanding Voltage:200V AC r.m.s
Operting Temperature:−40 ~+85
Materirls
Housing:High Temperature Plastic UL94V−0
Terminal:Copper Alloy
Material:PA9T
Contact:phosphor Bronae,Gold Plating;

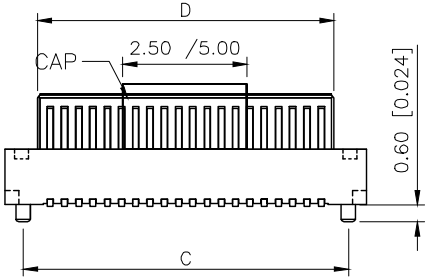

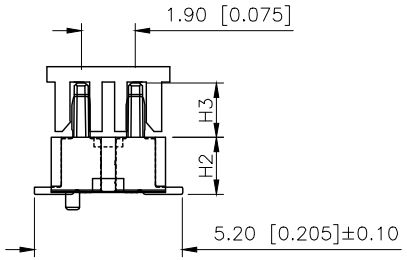

X0517WVS−36ES−9TV01	PA9T	Phosphor Bronze	X0517F
PART N0	Material	Material(Pin)	Suitable XKB Female

Poles	Dimensions/mm			
	A±0.10	B±0.10	C±0.10	D±0.10
08	4.70	1.50	3.40	2.40
10	5.20	2.00	3.90	2.90
12	5.70	2.50	4.40	3.40
14	6.20	3.00	4.90	3.90
16	6.70	3.50	5.40	4.40
18	7.20	4.00	5.90	4.90
20	7.70	4.50	6.40	5.40
22	8.20	5.00	6.90	5.90
24	8.70	5.50	7.40	6.40
26	9.20	6.00	7.90	6.90
28	9.70	6.50	8.40	7.40
30	10.20	7.00	8.90	7.90
32	10.70	7.50	9.40	8.40
34	11.20	8.00	9.90	8.90
36	11.70	8.50	10.40	9.40
40	12.70	9.50	11.40	10.40
42	13.20	10.00	11.90	10.90
44	13.70	10.50	12.40	11.40
46	14.20	11.00	12.90	11.90
48	14.70	11.50	13.40	12.40
50	15.20	12.00	13.90	12.90
52	15.70	12.50	14.40	13.40
60	17.70	14.50	16.40	15.40
70	20.20	17.00	18.90	17.90
80	22.70	19.50	21.40	20.40
100	27.70	24.50	26.40	25.40

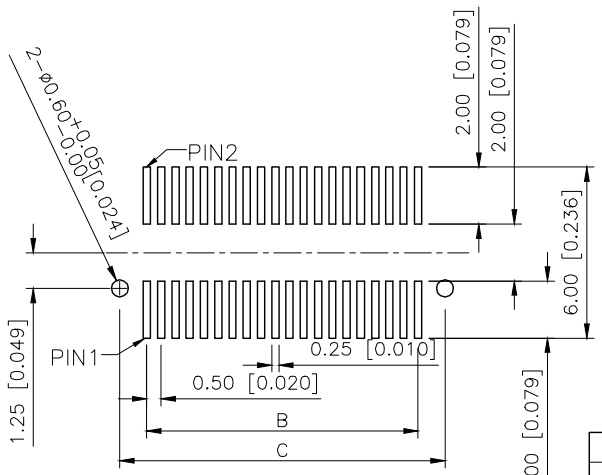

P.C.B PATTEN

PART NO.:

X0517 W V S−36 E S−9T V01

Series No
Category:W−Wafer
Welding Board Angle:V−Stright 180°
Welding Way:S−SMT
Row No.Pin No:XX−08~100Pin
Height:A−H2=0.80
B−H2=1.00
C−H2=1.30
D−H2=2.00
E−H2=4.00
Special No:S−With positioning Columm
Material:9T−PA9T 94V−0
Plating:V01−Gold Flash

High Photosynthesis (H)	The female seat height (H1)	The male seat height (H2)	Insertion height (H3)
3.00	2.20	0.80	1.60
3.50	2.20	1.30	1.60
4.00	3.00	1.00	1.90
4.50	3.50	1.00	1.90
5.00	3.00/4.00	2.00/1.00	1.90
5.50	3.50/4.50	2.00/1.00	1.90
6.00	4.00	2.00	1.90
6.50	4.50	2.00	1.90
7.00	3.00	4.00	1.90
7.50	3.50	4.00	1.90
8.00	4.00	4.00	1.90
8.50	4.50	4.00	1.90

AuGLAR	±5°
X.	±0.40
X.x	±0.30
X.xx	±0.20
X.xxx	±0.15
UNSPECIFIED TOLERAuCES	

XKB Connection

DESIGN		VIEW:	MODEL TYPE: 0.50mm BTB Style Connectors
CHECKED		UNIT: mm/in	PART NO.: X0517WVS−36ES−9TV01
APPROVED		SIZE: A4	DWG NO.:

XKB INDUSTRIAL PRECISION CO.,LIMITED

SCALE	PAGE	REVISION
N/A	1/1	A0