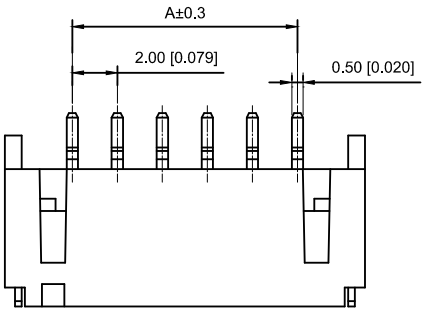

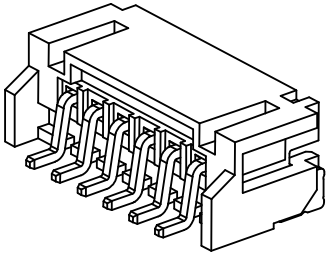

■ Specifications：

- Voltage rating: 100V AC / DC
- Current rating: 2A AC / DC
- Withstanding voltage: 800V AC/minute
- Temperature range: -25°C~+85°C
- Insulation resistance: ≥1000MΩ
- Contact resistance: ≤10mΩ
- After environmental testing：≤20mΩ

X2016 W R S-16- 9T SW
① ② ③ ④ ⑤ ⑥ ⑦

① Series No.
② Category：W-WAFER
③ Wedding Board Angle ：V-Stright 180°
④ Welding Way:S-SMT
⑤ Row No.-Pin No.: XX-02P~20P
⑥ Material： LP-LCP;9T-PA9T 94V-0
⑦ Plating Category: SW-MatteTin Plating;

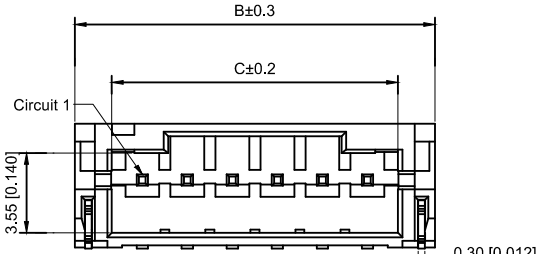

3P~20P Shape
Scale 1:1

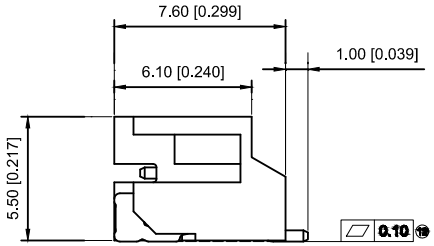

Poles	Dimensions(mm)			Poles	Dimensions(mm)		
	A	B	C		A	B	C
02	2.00	8.00	4.70	12	22.00	28.00	24.70
03	4.00	10.00	6.70	13	24.00	30.00	26.70
04	6.00	12.00	8.70	14	26.00	32.00	28.70
05	8.00	14.00	10.70	15	28.00	34.00	30.70
06	10.00	16.00	12.70	16	30.00	36.00	32.70
07	12.00	18.00	14.70	17	32.00	38.00	34.70
08	14.00	20.00	16.70	18	34.00	40.00	36.70
09	16.00	22.00	18.70	19	36.00	42.00	38.70
10	18.00	24.00	20.70	20	38.00	44.00	40.70
11	20.00	26.00	22.70				

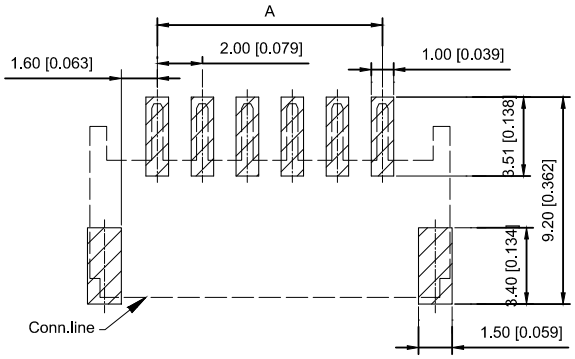

Recommended P.C.B Layout
General Tolerance±0.05

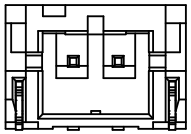

02P Shape
Scale 1:1

X2016WRS-16-LPSWHF	LCP UL 94V-0	Brass	Tin-Plated	X2016H
X2016WRS-16-LPSW				
X2016WRS-16-9TV01	PA9T UL 94V-0		Gold-Flash	
X2016WRS-16-9TSW			Tin-Plated	
PART N0	Material	Material(pin)	Finish(pin)	Suitable XKB Housing

MARK	DESCRIPTION	DATE	REVISED	APPROVED
ΔX				
ΔX				
ΔX				

REVISIONS

ANGLAR	±5°
L≤4	±0.2
4<L≤16	±0.3
16<L≤63	±0.4
L>63	±0.5

UNSPECIFIED TOLERANCES

www.xk-dg.cn www.helloxkb.com www.helloxkb.cn

DSND		DATE		SCALE: N/A
DWN		DATE		VIEW:
CHKD		DATE		UNIT: mm/in
APPD		DATE		SIZE: A4

XKB INDUSTRIAL PRECISION CO.,LIMITED

MODEL TYPE: 2.0mm Crimp Style Connectors
PART NO.: X2016WRS-16-9TSW
DWG NO.: X-X2016WRS-16-9TSW

WEIGHT	SHEET	REVISION
1.0g	1/1	A0