REVISIONS					
REV.	ECN NO.	LOCATION	DESCRIPTION	DATE	DESIGN
A0	N/A		INITIAL RELEASE	/	/
A1	N/A		图面升级整理图面	2025.05.22	阿树

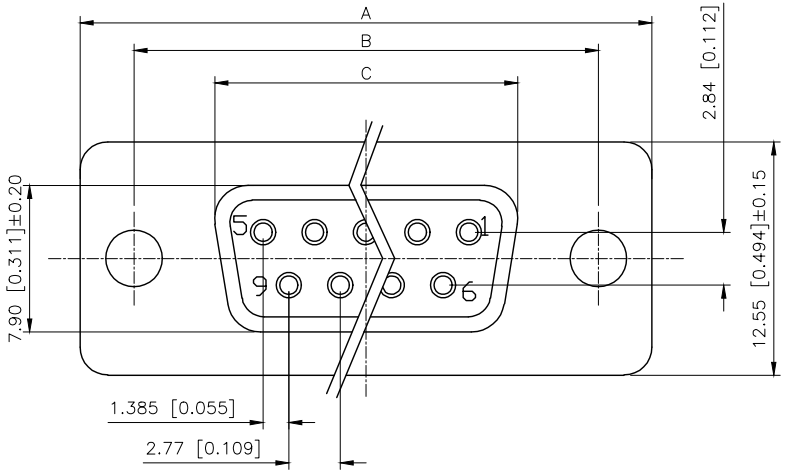

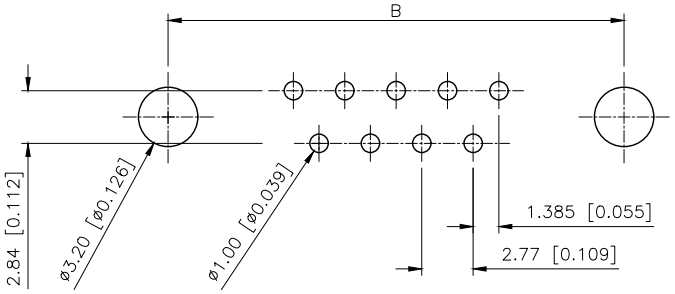

P.C.B LAYOUT

PART NO.:

X02 37 F T 7 B 7
① ② ③ ④ ⑤ ⑥ ⑦

①Series NO.
②Row No.Pin No.XX-09;15;25;37
③Welding Board Angle :F-Female
④T: Tradutional C: Car-pin
⑤Planting Categotry: 1:1U' 2:2U' 3:3U' 4:5U' 5:15U' 6:30U' 7:AuSn
⑥Color:B-BLACK W-White BL-Blue
⑦1:TYPE-1; 2:TYPE-2; 5:TYPE-5; 7:TYPE-7

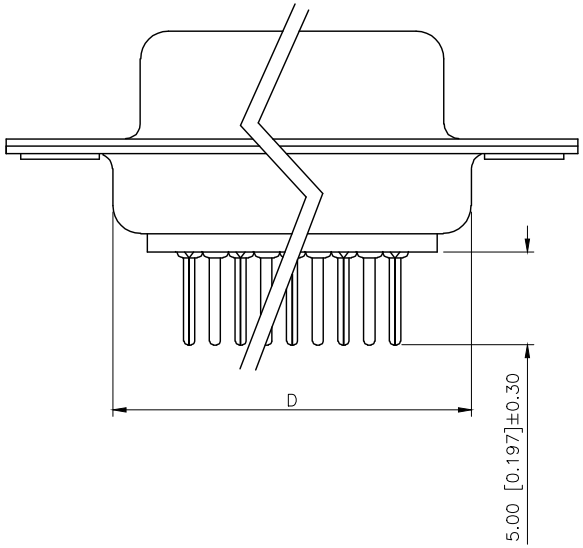

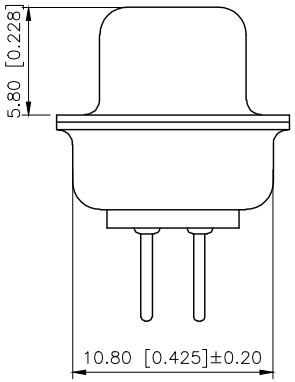

Specifications:
规格：
1.Voltage rating:250VAC/DC
额定电压：250V AC/DC
2.Current rating:1A AC/DC
额定电流：1A AC/DC
3.Withstanding voltage:500V AC/minute
耐受电压：≥500V AC/分钟
4.Temperature range: -55℃-+105℃
温度范围：-55℃-+105℃
5.Insulation resistance:1000MΩMIN
绝缘电阻：≥1000MΩ
6.Contact resistance:30mΩMax
接触电阻：≥30mΩ
Materiai:
材料：
7.Rubber core:PBT UL94V-0
胶芯：PBT UL94V-0
8.The iron shell:SPCC Nivkel Plating/Tin Plating/Gold Plating
铁壳：SPCC,镀镍/镀锡/镀金
9.Terminal: C2680
端子：C2680
成品不能有弯针，R角不一致等不良。

NUMBER OF POSITIONS	DIMENSION			
	A±0.25	B±0.13	C±0.38	D±0.25
9	30.80	24.99	16.35	19.28
15	39.20	33.32	24.75	27.51
25	53.05	47.04	38.35	41.28
37	69.40	63.50	54.75	57.71

铆合方式	TYPE-1:铆合	TYPE-2:前铆实心螺母	TYPE-7:后铆鱼叉	TYPE-5:铆鱼叉锁螺丝
图示	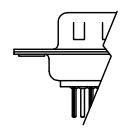	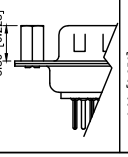	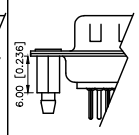	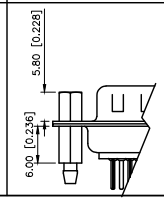

AuGLAR	±5°
X.	±0.40
X.x	±0.30
X.xx	±0.20
X.xxx	±0.15
UNSPECIFIED TOLERAuCES	

XKB Connection 星创

DESIGN	阿树	VIEW:	MODEL TYPE: D-SUB
CHECKED		UNIT: mm/in	PART NO.: X0237FT7B7
APPROVED		SIZE: A4	DWG NO.:

XKB INDUSTRIAL PRECISION CO.,LIMITED

SCALE	PAGE	REVISION
N/A	1/1	A1