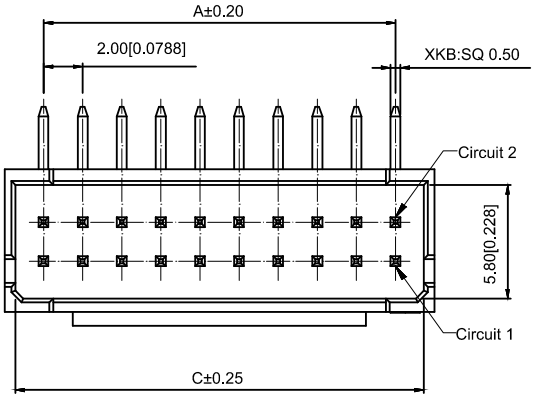

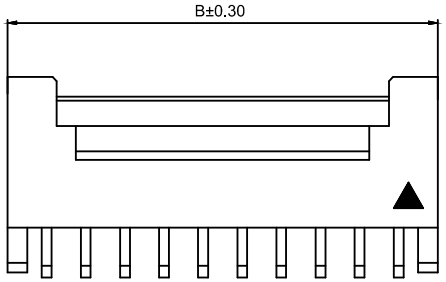

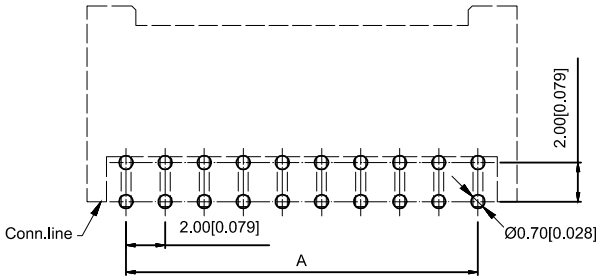

Recommended PCB Layout
General Tolerance±0.05

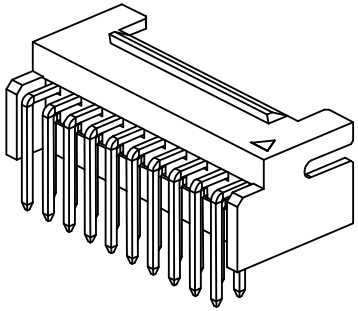

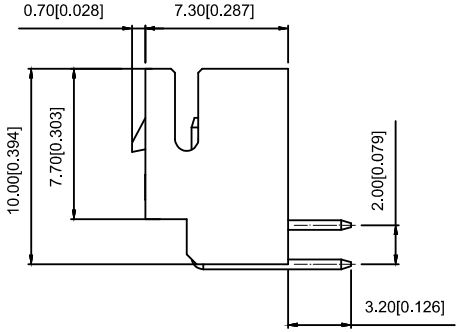

Specifications:
规格：
Voltage rating:250V AC/DC
额定电压： 250V AC/DC
Current rating:3A AC/DC
额定电流： 3A AC/DC
Withstanding voltage:1000V AC/minute
耐受电压： 1000V AC/ 分钟
Temperature range:-25 ℃-+85℃
温度范围： -25℃-+85℃
Insulation resistance:≥1000MΩ
绝缘电阻： ≥1000MΩ
Contact resistance:≤30mΩ
接触电阻： ≤30mΩ
After environmental testing:≤50mΩ
环境测试后： ≤50兆欧

X2026 W V X-2x14D- 46 SN
① ②③④ ⑤ ⑥ ⑦ ⑧ ⑨

1.Series No
2.Category:W-WAFER
3.Welding Board Angle:R-Right Angle 90°
4.Welding Way:Blank-DIP
5.Row No-Pin No:2xXX-2x04P~2x30P
6.Plug the Pin&Special N0:
D-With Lock in the middle
7.Material:46-PA46 94V-0,4T-PA4T 94V-0
8.Plating Category:SN-Bright Tin Plating
9.Color： Blank-Natural Color

poles	Dimensions(mm)			poles	Dimensions(mm)			poles	Dimensions(mm)		
	A	B	C		A	B	C		A	B	C
2x02	2.00	6.00	4.90	2x10	18.00	22.00	20.90	2x18	34.00	38.00	36.90
2x03	4.00	8.00	6.90	2x11	20.00	24.00	22.90	2x19	36.00	40.00	38.90
2x04	6.00	10.00	8.90	2x12	22.00	26.00	24.90	2x20	38.00	42.00	40.90
2x05	8.00	12.00	10.90	2x13	24.00	28.00	26.90	2x30	58.00	62.00	60.90
2x06	10.00	14.00	12.90	2x14	26.00	30.00	28.90				
2x07	12.00	16.00	14.90	2x15	28.00	32.00	30.90				
2x08	14.00	18.00	16.90	2x16	30.00	34.00	32.90				
2x09	16.00	20.00	18.90	2x17	32.00	36.00	34.90				

X2026WR-2x14D-4T SN	PA4T 94V-0	Brass	Tin-Plated	X2026H-D
X2026WR-2x14D-46 SN	PA46 94V-0	Brass	Tin-Plated	X2026H-D
PART NO	Material	Material(pin)	Finish(Pin)	Suitable XKB Housing

Wire to board connector

MARK	DESCRIPTION	DATE	REVISED	APPROVED
ΔX				
ΔX				
ΔX				

REVISIONS

www.xk-dg.cn www.helloxkb.com www.helloxkb.cn

units:	mm
tolerance:	
X.X	±0.2mm
X.XX	±0.1mm
X.XXX	±0.05mm

UNSPECIFIED TOLERANCES

DSND		DATE		SCALE: N/A
DWN		DATE		VIEW:
CHKD		DATE		UNIT: mm/in
APPD		DATE		SIZE: A4

XKB INDUSTRIAL PRECISION CO.,LIMITED

MODEL TYPE: 2.00mm Crimp Style Connectors
PART NO.: X2026WR-2x14D-46SN
DWG NO.: X-X2026WR-2x14D-46SN

WEIGHT	SHEET	REVISION
1.0g	1/1	A0