| REVISIONS | | | | | |
|---|---|---|---|---|---|
| REV. | ECN NO. | LOCATION | DESCRIPTION | DATE | DESIGN |
| A0 | N/A | | 新增卡扣R角，增强卡扣强度 | 2024.03.14 | 桑 甚 |
| | | | | | |

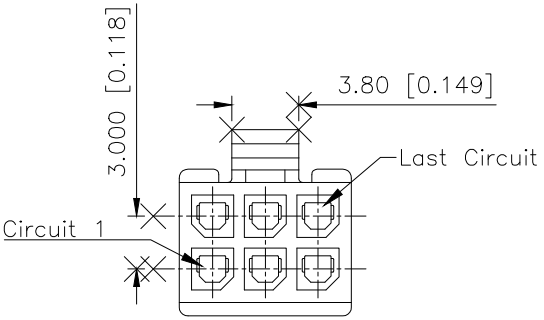


2x03–2x12P

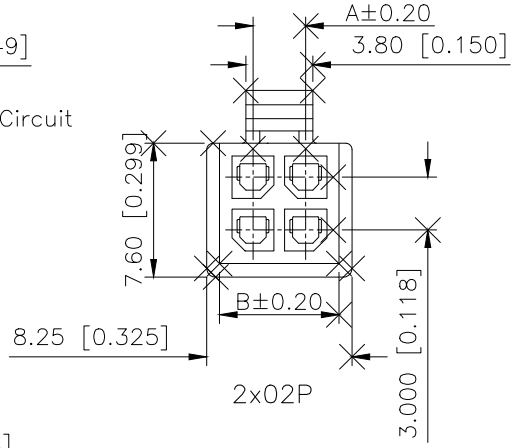


2x02P

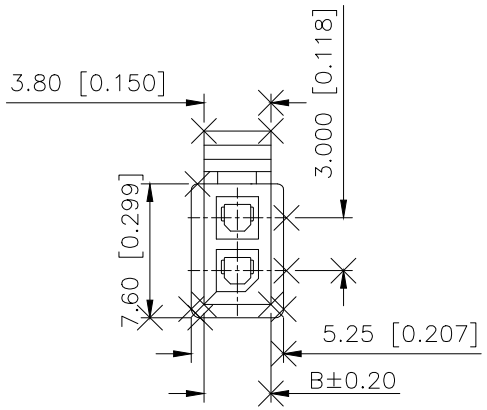


2x01P

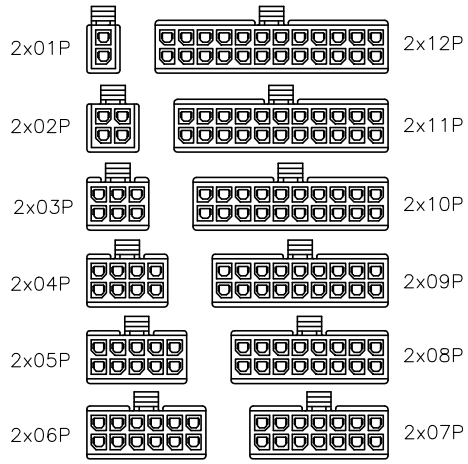


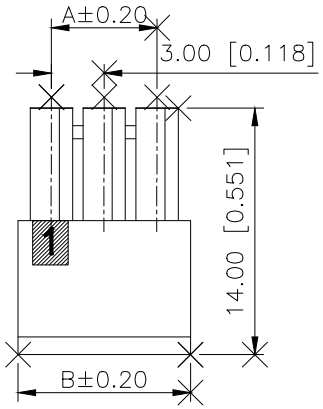


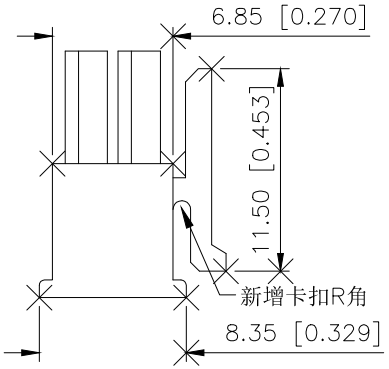


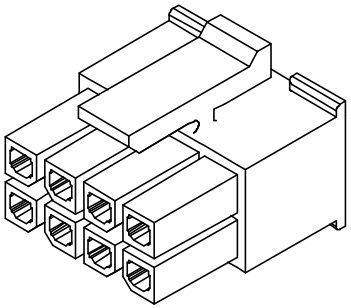

3D VIEW

Specifications(规格):

1. Voltage rating(额定电压):250V AC DC
2. Current rating(额定电流):5.0A AC/DC
3. Withstanding voltage(耐压值):≥1500V AC/minute
4. Insulation resistance(绝缘电阻):1000MΩ Min
5. Contact resistance(接触电阻):20mΩ Max
6. Temperature range(使用温度):-25℃~+85℃

PART NO.:

X3025 H M–2x09 N2
① ② ③ ④ ⑤

① Series No
② Category:H-Housing
③ Welding Board Angle:M-Male Housing
④ Row No-Pin: 2x01-2x12P
⑤ Material:N2-PA66, UL 94V-2, BLACK

| POLES | DIM.A | DIM.B |
|---|---|---|
| 2x02 | 3.00 | 6.85 |
| 2x03 | 6.00 | 9.85 |
| 2x04 | 9.00 | 12.85 |
| 2x05 | 12.00 | 15.85 |
| 2x06 | 15.00 | 18.85 |
| 2x07 | 18.00 | 21.85 |
| 2x08 | 21.00 | 24.85 |
| 2x09 | 24.00 | 27.85 |
| 2x10 | 27.00 | 30.85 |
| 2x11 | 30.00 | 33.85 |
| 2x12 | 33.00 | 36.85 |

| PART NO. | MATERIAL | COLOR | X3025W Suitable XKB Wafer | X3025TF Suitable XKB Terminal |
|---|---|---|---|---|
| X3025HM–2x09–N2 | PA66 94V–2 | BLACK | | |

| ANGLAR | ±5° |
|---|---|
| X. | ±0.40 |
| X.x | ±0.30 |
| X.xx | ±0.20 |
| X.xxx | ±0.15 |
| UNSPECIFIED TOLERANCES | |

XKB INDUSTRIAL PRECISION CO.,LIMITED

| | | | |
|---|---|---|---|
| DESIGN | 桑 甚 | VIEW: | MODEL TYPE: 3.0mm Crimp Style Housing |
| CHECKED | | UNIT: mm/in | PART NO.: X3025HM–2x09–N2 |
| APPROVED | | SIZE: A4 | DWG NO.: X–X3025HM–2x09–N2 |

| SCALE | PAGE | REVISION |
|---|---|---|
| N/A | 1/1 | A0 |