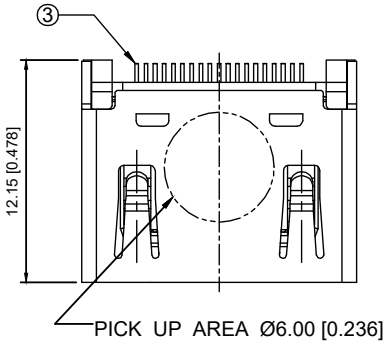

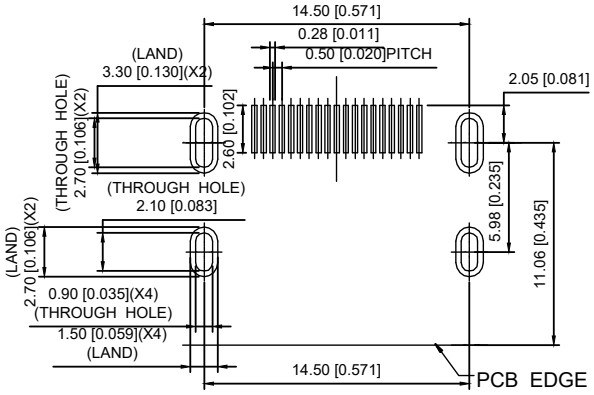

RECOMMENDED P.C.B. LAYOUT (T:1.20~1.60mm)
TOLERANCE UNSPECIFIED ±0.05mm

SPECIFICATIONS
1.OPERATINGCURRENT:0.5A MAX.
2.OPERATION TEMPERATURE:-25℃ TO +85℃
3.DIELECTRICWITHSTANDING VOLTAGE:
500Volts AC BETWEEN ADIACENT TERMINAL(UNMATE)
300Volts AC BETWEEN ADIACENT TERMINAL(MATE)
4.INSULATION RESISTANCE:
100Mohm MIN(UNMATED);10Mohm MIN.(MATED)
5.HDMI SPECIFICATION COMPLIANCE

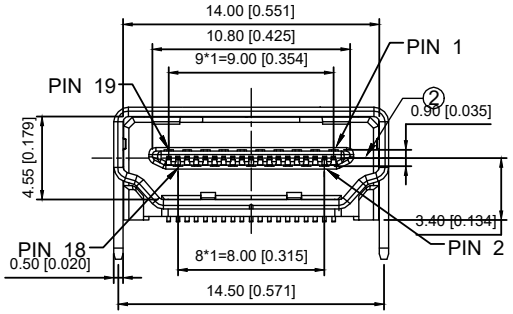

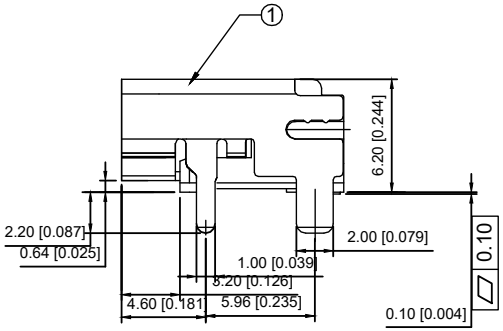

A71-05H5-151N1

1:Au 1U"
5:Au 15U"
6:Au 30U"

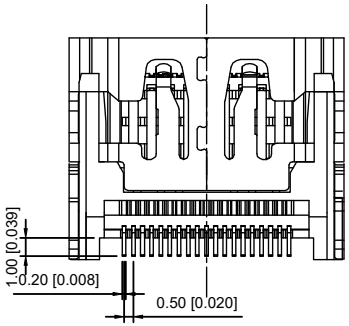

3	CONTACTS	19	COPPER ALLOY,GOLD PLATED OVER NICKEL ON CONTACT AREA AND 100u" MIN.TIN PLATED OVER NICKEL ON SOLDER TAILS
2	HOUSING	1	THERMOPLASTIC UL94V-0
1	SHELL	1	COPPER ALLOY, NICKEL PLATED

ROHS COMPLIANCE

MARK	DESCRIPTION	DATE	REVISED	APPROVED
ΔX				
ΔX				
ΔX				

REVISIONS

UNSPECIFIED TOLERANCES	
ANGLAR	±5°
L≤ 4	±0.2
4<L≤ 16	±0.3
16<L≤ 63	±0.4
L> 63	±0.5

XKB INDUSTRIAL PRECISION CO.,LIMITED

DSND		SCALE: N/A	MODEL TYPE: HDMI CONNECTOR
DWN		VIEW:	PART NO.: A71-05H5-151N1
CHKD		UNIT: mm/in	DWG NO.: A71-05H5-151N1
APPD		SIZE: A4	

WEIGHT	SHEET	REVISION
	1/1	A0

www.helloxkb.com www.helloxkb.cn www.xk-dg.cn