REVISIONS					
REV.	ECN NO.	LOCATION	DESCRIPTION	DATE	DESIGN
A0	N/A		INITIAL RELEASE	/	/
A1	N/A		图面升级整理图面	2025.05.26	阿树

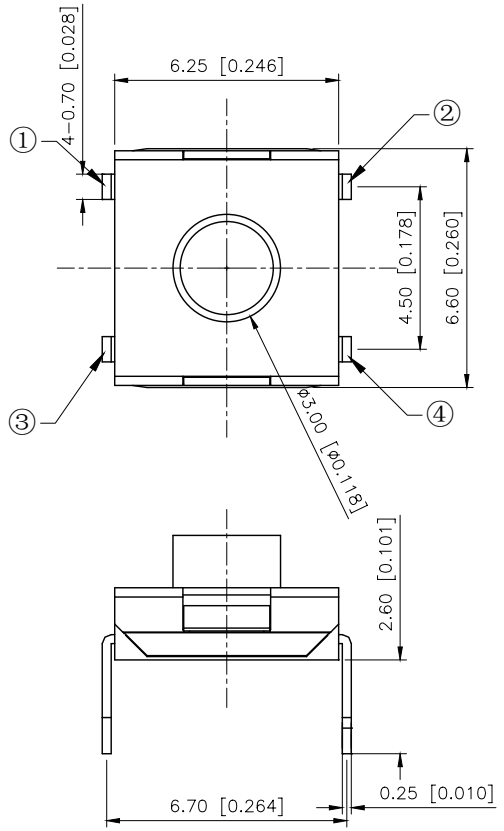

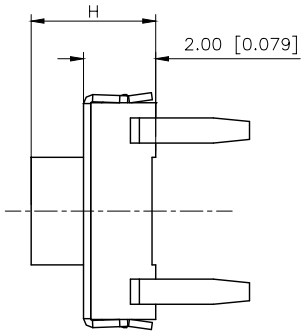

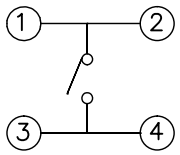

SCHEMATIC

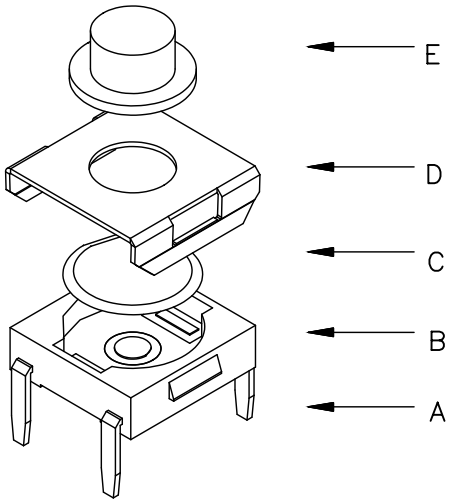

Code-x	H
A	2.50
B	3.10
C	3.40
D	3.70
E	4.30
F	5.00

主要技术参数、性能
The Main Thchnology Performance
额定电流、电压:50mA DC12V
Rate voltage.current:50mA DC12V
接触电阻:≤100mΩ
Contact resistance:≤100mΩ
按力 :50gf
Operating force:50gf
行程: 0.25+ 0.10mm
Travel: 0.25+ 0.10mm
绝缘电阻: ≥100MΩ
Insulated resistance: ≥100MΩ
介电强度: ≥250VAC/1min
Dielectric strength: ≥250VAC/1min

PAPT NO	TC-1157-C-A
Operating Force	A:100gf B:160gf C:260gf
Height	Code-X

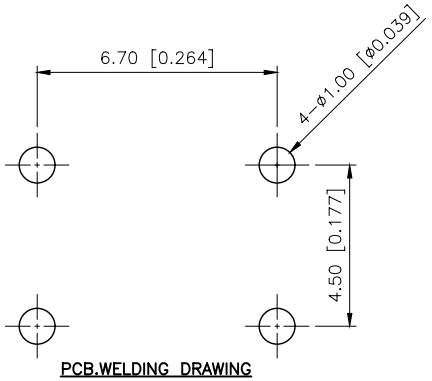

PCB.WELDING DRAWING

ITEM	PAPT NAMF	QTY	MATERIAL	FINISHING
⑤	Terminal	4	Brass (0.30t)	Plating silvering
④	Contact	1	F.ag/SUS	Natural
③	Base	1	PPA	
②	Cover	1	Spcc	Plating Nickel
①	Keystake	1	PPA	

AuGLAR	±5°
X.	±0.40
X.x	±0.30
X.xx	±0.20
X.xxx	±0.15
UNSPECIFIED TOLERAuCES	

XKB Connection 星坤

DESIGN	阿树	VIEW:	MODEL TYPE: TACT SWITCH
CHECKED		UNIT: mm/in	PART NO.: TC-1157-C-A
APPROVED		SIZE: A4	DWG NO.: TC-1157-C-A

XKB INDUSTRIAL PRECISION CO.,LIMITED

SCALE	PAGE	REVISION
N/A	1/1	A1