REVISIONS					
REV.	ECN NO.	LOCATION	DESCRIPTION	DATE	DESIGN
A1	N/A		pin数表尺寸补充，图面升级整理图面	2024.08.19	阿树
A2	N/A		产品总长尺寸变更	2024.11.26	阿树

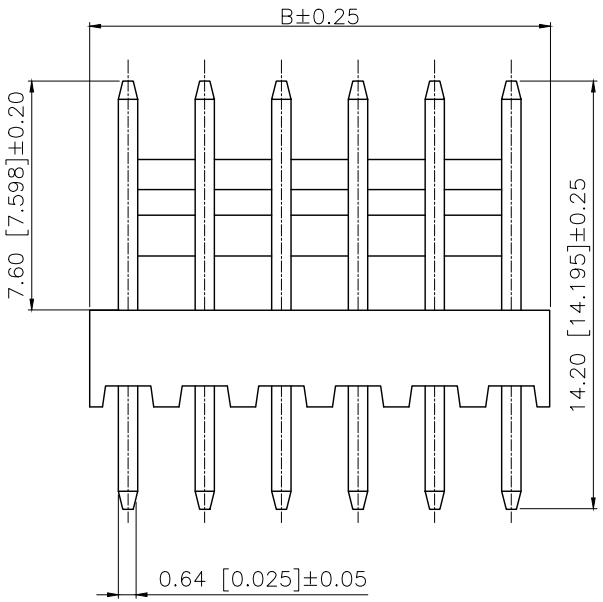

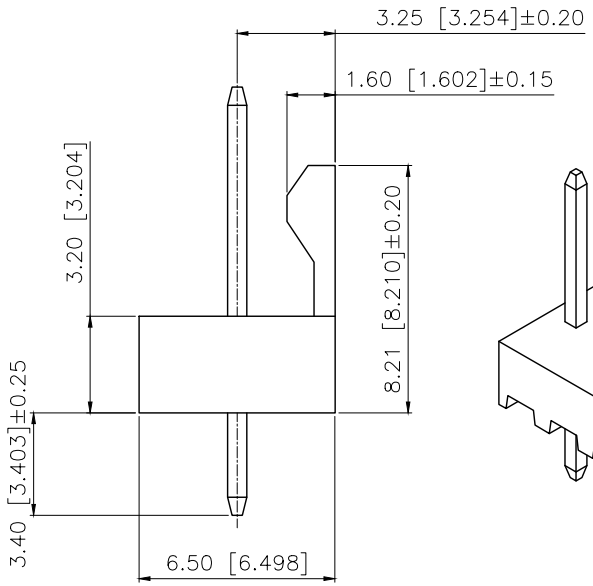

■SPECIFICATIONS
- Voltage rating:250V AC/DC
- Current rating:2A AC/DC
- Withstanding Voltage:1500V AC/minute
- Temperature range:−25°C~+85°C
- Insulation resistance:≥1000MΩ
- Contact resistance:≤20mΩ

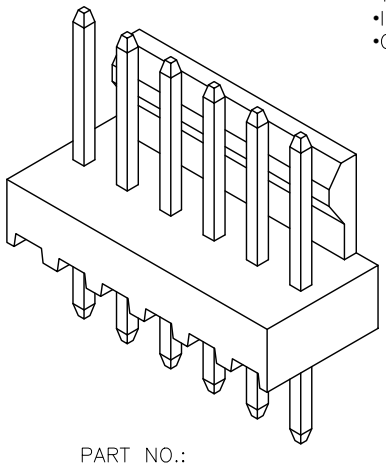

PART NO.:

X2954 W V−15−N0 SN
① ② ③ ④ ⑤ ⑥

①Series No
②Category:W−Wafer
③Welding Board Angle:V−Stright 180°
④Row No−Pin No:XX−02−20PIN
⑤Material:N0−Nylon66 UL94V−0
⑥Plating:SN−Tin Plated
V01−Gold−flash

Poles	DIM		
	A	B	C
02	2.54	5.08	2.54
03	5.08	7.62	5.08
04	7.62	10.16	7.62
05	10.16	12.70	10.16
06	12.70	15.24	12.70
07	15.24	17.78	15.24
08	17.78	20.32	17.78
09	20.32	22.86	20.32
10	22.86	25.40	22.86
11	25.40	27.94	25.40
12	27.94	30.48	27.94
13	30.48	33.02	30.48
14	33.02	35.56	33.02
15	35.56	38.10	35.56
16	38.10	40.64	38.10
17	40.64	43.18	40.64
18	43.18	45.72	43.18
19	45.72	48.26	45.72
20	48.26	50.80	48.26

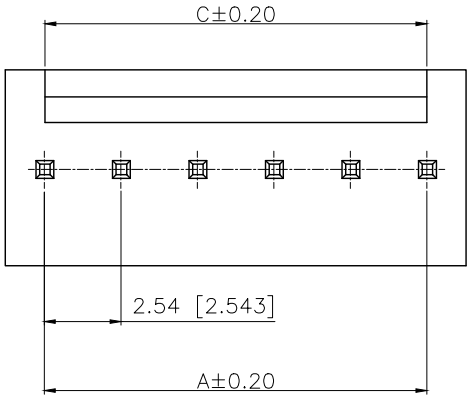

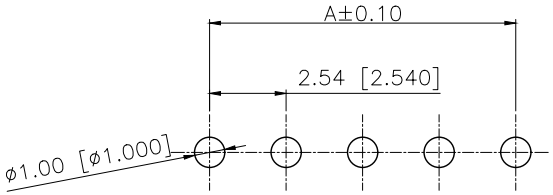

PCB LAYOUT

PART NO	Material	Material(Brass)	Suitable XKB Housing
X9254WV−XX−N0V01	Nylon66	Gold−flash	X9254H
X9254WV−15−N0SN		Tin Plated	

AuGLAR	±5°
X.	±0.40
X.x	±0.30
X.xx	±0.20
X.xxx	±0.15
UNSPECIFIED TOLERAuCES	

XKB Connection 星创

DESIGN	阿树	VIEW:	MODEL TYPE: 2.54mm Crimp Style Connector
CHECKED		UNIT: mm/in	PART NO.: X9254WV−15−N0SN
APPROVED		SIZE: A4	DWG NO.:

XKB INDUSTRIAL PRECISION CO.,LIMITED

SCALE	PAGE	REVISION
N/A	1/1	A2

www.helloxkb.com www.helloxkb.cn www.xk−dg.cn