REVISIONS					
REV.	ECN NO.	LOCATION	DESCRIPTION	DATE	DESIGN
A0	N/A		INITIAL RELEASE	2024.05.09	桑 甚

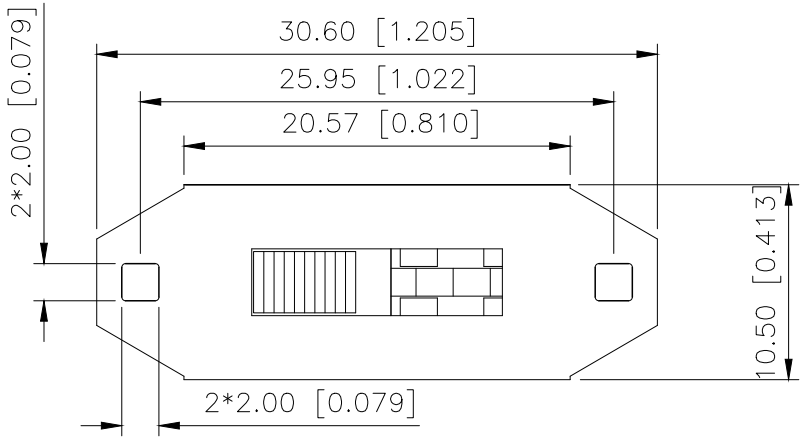

规格 Specification：

1.额定值 Rating:3A 125/250VAC
2.接触电阻 Contact resistance:≤30 mΩ
3.绝缘电阻 Insulation resistance:≥100 MΩ(DC500V/Min)
4.电气寿命 Electronics life:＞10000 cycles
5.操作力 Operation force:500±150gf
6.所有材料符合Rohs要求 All meterials are Rohs compliant

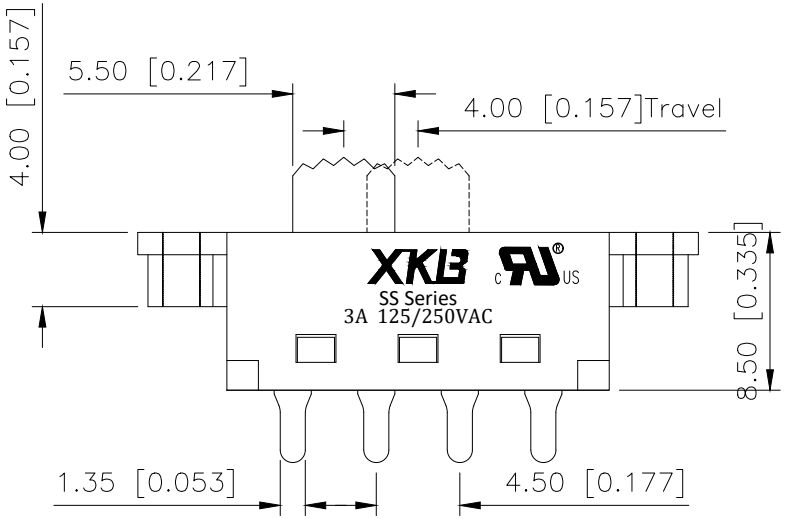

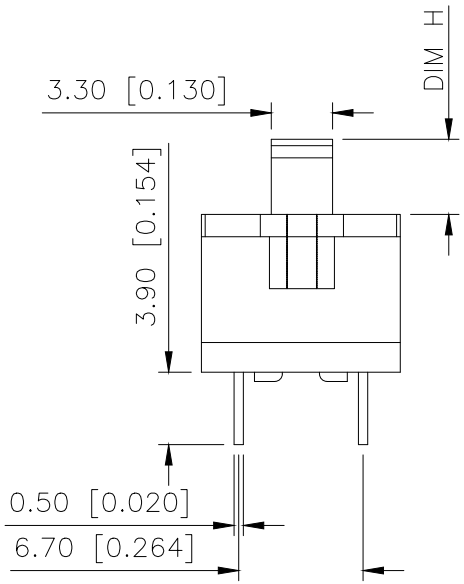

PART NO.:

SS−X 03 23 P G−6 R 1 B B
① ② ③ ④ ⑤ ⑥ ⑦ ⑧ ⑨ ⑩ ⑪

① SS：XKB Vertical handle;
② Enclosure Material:
A−Metal case;
BLANK−Plastic case;
③ Current Rating：03−3A;
④ Switch Circuit:23−2P3T;
⑤ P：Welding plates;
⑥ Handle Shape：G−Camber handle;
⑦ Handle Height：3~15mm;
⑧ Enclosure Shape:R−Locking rings enclosure;
⑨ Terminal specs:
1:TYPE−1；2:TYPE−2；3:TYPE−3;
4:TYPE−4；5:TYPE−5;
⑩ Handle Colour:
B−Black；W−White；R−Red
⑪ Housing Colour:
B−Black；W−White；R−Red

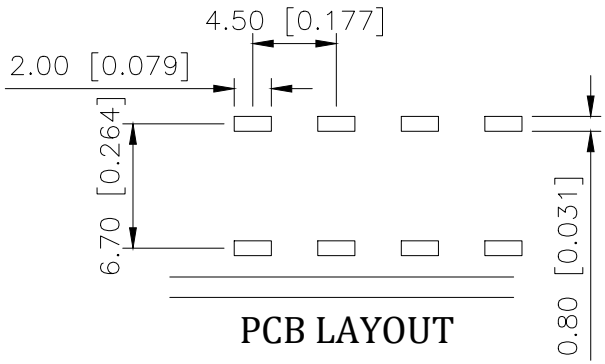

PCB LAYOUT

XKB
SS Series
3A 125/250VAC

产品字码标识

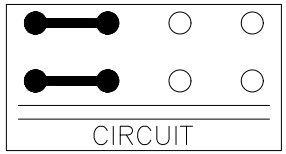

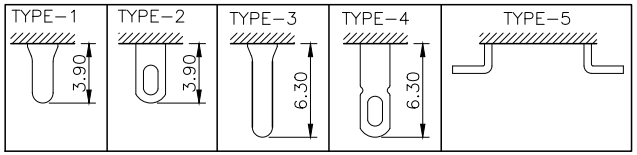

ANGLAR	±5°
X.	±0.40
X.x	±0.30
X.xx	±0.20
X.xxx	±0.15
UNSPECIFIED TOLERANCES	

XKB INDUSTRIAL PRECISION CO.,LIMITED

DESIGN	桑 甚	VIEW:	MODEL TYPE: SLIDE SWITCH
CHECKED		UNIT: mm/in	PART NO.: SS−0323PG−6R1BB
APPROVED		SIZE: A4	DWG NO.: X−SS−0323PG−6R1BB

SCALE	PAGE	REVISION
N/A	1/1	A0